Australian Standard™

Steel shoring and trench lining equipment

Part 1: Design

Standards Australia

This Australian Standard was prepared by Committee ME/82, Shoring and Trench Lining. It was approved on behalf of the Council of Standards Australia on 4 August 2000 and published on 20 November 2000.

The following interests are represented on Committee ME/82:

Australian Industry Group

Civil Contractors Federation

Concrete Pipe Association of Australasia

Construction, Forestry, Mining and Energy Union

Department of Employment, Training and Industrial Relations (Qld)

Institution of Engineers Australia

Master Plumbers and Mechanical Services Association of Australia

Water Services Association of Australia

WorkSafe Western Australia

Keeping Standards up-to-date

Standards are living documents which reflect progress in science, technology and systems. To maintain their currency, all Standards are periodically reviewed, and new editions are published. Between editions, amendments may be issued. Standards may also be withdrawn. It is important that readers assure themselves they are using a current Standard, which should include any amendments which may have been published since the Standard was purchased.

Detailed information about Standards can be found by visiting the Standards Australia web site at www.standards.com.au and looking up the relevant Standard in the on-line catalogue.

Alternatively, the printed Catalogue provides information current at 1 January each year, and the monthly magazine, *The Australian Standard*, has a full listing of revisions and amendments published each month.

We also welcome suggestions for improvement in our Standards, and especially encourage readers to notify us immediately of any apparent inaccuracies or ambiguities. Contact us via email at mail@standards.com.au, or write to the Chief Executive, Standards Australia International Ltd, GPO Box 5420, Sydney, NSW 2001.

This Standard was issued in draft form for comment as DR 99505.

Australian Standard™

Steel shoring and trench lining equipment

Part 1: Design

First published as AS 4744.1—2000.

COPYRIGHT

© Standards Australia International

All rights are reserved. No part of this work may be reproduced or copied in any form or by any means, electronic or mechanical, including photocopying, without the written permission of the publisher.

Published by Standards Australia International Ltd
GPO Box 5420, Sydney, NSW 2001, Australia

ISBN 0 7337 3556 8

PREFACE

This Standard was prepared by the Standards Australia Committee ME/82.

The objective of this Standard is to provide safe specifications for the design and rating of steel shoring and trench lining equipment for use in trench digging operations thus providing the knowledge necessary to minimize the likelihood of trench collapse resulting in fatality.

This Standard is based on draft CEN Standard prEN 13331-1, *Trench lining systems*, Part 1: *Product specifications*, and Part 2: *Assessment by calculation or test*. It differs from those documents in that a lower minimum shield rating of 20 kPa is allowed.

Published Standards in the series are:

AS
4744 Steel shoring and trench lining equipment
4744.1 Design

It is intended to publish the following part:

Safe use

Australian Standards are not intended, in their own right, to be retrospective. They usually apply to new plant. The relevant authorities in each State may or may not require that all existing plant comply with this Standard. Individual authorities should be consulted as to whether they require existing plant to comply with this Standard.

The terms 'normative' and 'informative' have been used in this Standard to define the application of the appendix to which they apply. A 'normative' appendix is an integral part of a Standard, whereas an 'informative' appendix is only for information and guidance.

CONTENTS

Page

FOREWORD 4

SECTION 1 SCOPE AND GENERAL
1.1 SCOPE 5
1.2 APPLICATION 5
1.3 GENERAL 5
1.4 NEW DESIGNS AND INNOVATIONS 5
1.5 REFERENCED DOCUMENTS 5
1.6 NOTATION 6
1.7 DEFINITIONS 7

SECTION 2 SYSTEM AND COMPONENTS—DESCRIPTION AND EXAMPLES
2.1 COMMON TRENCH LINING SYSTEMS 9
2.2 SUPPORTING COMPONENTS 12
2.3 STRUT TO PANEL/SLIDE RAIL CONNECTION 14
2.4 PANEL TO PANEL CONNECTIONS 15

SECTION 3 DESIGNATION
3.1 PANEL DESIGNATION 17
3.2 STRUT DESIGNATION 17
3.3 SLIDE RAIL DESIGNATION 17

SECTION 4 MATERIALS 18

SECTION 5 DESIGN REQUIREMENTS
5.1 GENERAL REQUIREMENTS 19
5.2 MINIMUM RATED SYSTEM CAPACITY 20
5.3 MAXIMUM ELASTIC DEFLECTION 20
5.4 ATTACHMENT POINTS 20
5.5 STRUTS 21
5.6 STRUT TO PANEL OR SLIDE RAIL CONNECTION 24

SECTION 6 INSTRUCTION MANUAL
6.1 GENERAL REQUIREMENTS 25
6.2 PRINCIPAL CONTENTS 25

SECTION 7 MARKING 26

SECTION 8 EVALUATION OF CONFORMITY
8.1 DECLARATION 27
8.2 PROVISION OF SPECIFICATIONS 27

APPENDICES
A PARTIAL SAFETY FACTORS 28
B RELATIONSHIP BETWEEN LOADS AND RESISTANCE 29
C DETERMINATION OF EARTH PRESSURES AND STRUT LOADS USING EMPIRICAL PRESSURE ENVELOPES 30
D TYPICAL GROUND PARAMETERS 32
E ADDITIONAL LOADS 33

FOREWORD

Shoring and trench lining systems are intended for use in temporary works to protect the workers and the works from the effects of any trench collapse.

This Standard covers steel shoring and trench lining equipment because most shoring systems in use are steel. Very few shoring systems in the industry are made of other materials like wood, aluminium and fibreglass and, because such systems behave so differently to steel and require different design considerations, they were considered to be a different topic. Thus, shoring systems made of other materials were excluded from the Scope of this Standard to expedite the publication of this document.

STANDARDS AUSTRALIA

Australian Standard
Steel shoring and trench lining equipment

Part 1: Design

SECTION 1 SCOPE AND GENERAL

1.1 SCOPE

This Standard specifies the requirements for steel shoring and trench lining systems assembled completely from prefabricated components. It includes requirements for the design, construction and intended use of such systems.

1.2 APPLICATION

This Standard applies to all new shoring and trench lining systems. All systems shall comply with this Standard within 24 months of the publication date of this Standard.

1.3 GENERAL

Trench lining systems are intended for use in temporary works to protect workers and the works from the effects of any trench collapse or ground movement or both.

Drawings presented in this Standard are for illustrative purposes and are not intended for use as engineering drawings.

Manufacturers shall keep up to date records of all trench lining system components that have been manufactured and shall keep records of conformity of materials used.

1.4 NEW DESIGNS AND INNOVATIONS

This Standard is not intended to preclude novel materials, designs and the like, which do not comply with this Standard or are not mentioned in it but which can be shown to give equivalent or superior results.

1.5 REFERENCED DOCUMENTS

AS
1163 Structural steel hollow sections
3679 Structural steel
3679.2 Part 2: Hot-rolled steel bars and sections
4100 Steel structures
1726 Geotechnical site investigation
AS/NZS
1594 Hot-rolled steel flat products

© Standards Australia

1.6 NOTATION

The following symbols are used in this Standard:

Symbol	Description	Units
A_p	Area of the panel	m^2
B_k	Characteristic slide rail bending resistance	kNm
b	Trench width	m
b_c	Internal trench lining width	m
D_i	External diameter of the inner tube	mm
D_o	External diameter of outer tube	mm
e_d	Design load	kPa
e_k	Rated load	KPa
F_{ck}	Characteristic strut compression resistance	kN
F_{tk}	Characteristic strut tensile resistance	kN
h	Height of the panel	m
h_b	Distance between axis of the bottom strut and the lower edge of the panel	m
h_c	Bottom-strut clearance	m
h_m	Distance between the upper strut and the bottom strut	m
h_t	Distance between the axis of the upper strut and the top edge of the panel	m
L_s	Strut maximum working length	m
P_k	Characteristic panel resistance	KPa
R_d	Design system resistance	Kpa
R_{Ek}	Characteristic extracting, connecting and pulling points resistance (vertical direction)	kN
R_k	Characteristic system resistance	KPa
s	Thread depth	mm
s_r	Radial engagement of the thread	mm
t	Wall thickness of the tube	mm
α	Thread helix angel	Deg.
β	Telescoping strut angular misalignment	Deg.
γ_F	Partial safety factor for action	—
γ_{FS}	Strut partial safety factor for action	—
γ_{FP}	Panel partial safety factor for action	—
γ_M	Partial safety factor for resistance	—
Δ	Deflection of the panel due to earth pressure	—
ϕ	Angle of internal friction of soil (total stress)	—
ϕ'	Angle of internal friction of soil (effective stress)	—
μ	Coefficient of friction	—

1.7 DEFINITIONS

For the purposes of this Standard, the definitions below apply:

1.7.1 Characteristic system resistance (R_k)

Ultimate resistance to an external load of a complete assembly of components of a trench lining system.

NOTE: This is the key value for the tench lining system in a particular configuration. The value will be controlled by the weakest component used.

1.7.2 Connecting point

Point for connecting base panels to top panels, top panels to top panels and slide rails to slide rails in a vertical direction.

1.7.3 Connector

Unit that forms the connections between the lower and an upper module or between two upper modules.

1.7.4 Cutting edge

An edge of the panel that comes into contact with the ground, which is designed to aid passage of the panel during installation of the shoring system.

1.7.5 Dig and push

Term used to describe installation of the shoring system, whereby the shoring unit in contact with the soil face is pushed into the ground to refusal. The material on the excavation side is then removed, allowing the shoring to be pushed still further into the ground. The process is then repeated continuously until the shoring is at the required depth.

1.7.6 Extraction point

The point for attachment of a lifting device for removal of the trench lining system from the excavation.

1.7.7 Handling point

Point for handling components to aid the assembly of the system and for use in transportation.

1.7.8 Internal trench lining width (b_c)

Clear horizontal distance, b_c, between the panels of a trench lining system (see Figure 1).

1.7.9 Lifting point

A component or system fixed into the panel for later attachment to the lifting device.

1.7.10 Lower module

An assembly of panels, posts and struts which together form an integral shoring system which is installed in the ground first.

1.7.11 Panel connector

Component used to connect two vertically adjacent panels or slide rails (see Figures 9 and 10).

1.7.12 Post

Integral with the panel, the post allows connection between the panel and strut.

1.7.13 Pre-driven

Method of installation of slide rail posts which are driven into the ground to required depth, before the excavation process begins.

 © Standards Australia

1.7.14 Professional engineer

A professional engineer is —

(a) a person registered in a relevant area of practice on the National Professional Engineers Register administered by The Institution of Engineers, Australia, and covered by any required Professional Indemnity Insurance; or

(b) where applicable, a Member of a Scheme established under Professional Standards Legislation in the relevant jurisdiction; or

(c) a Chartered Professional Engineer (CPEng) or other persons providing satisfactory evidence to a responsible authority that they have the qualifications and experience to be competent to perform the required tasks, independently.

1.7.15 Pulling point

Point for horizontally pulling drag boxes.

1.7.16 Strut working length

The connected length of strut componentry between the centres of each point of strut to panel connection.

1.7.17 Racking

Action applied to trench lining equipment whereby alternate panels are individually and progressively pushed into the ground to facilitate installation, or are individually and progressively pulled out of the ground to facilitate extraction.

1.7.18 Slide rail

Discreet vertical member which has a groove or grooves at each side to engage with and guide panels. Opposite rails are connected by struts or supporting frames (see Figure 3).

1.7.19 Strut

A component that connects two opposing posts.

1.7.20 Trench lining systems

Pre-engineered systems that are designed to protect the workers and the works from the effects of any trench collapse or ground movement, or both.

1.7.21 Trench width (b)

Distance between the soil faces.

1.7.22 Bottom-strut clearance (h_C)

Vertical distance between the lowest point of the bottom strut and the lowest edge of a panel or slide rail (see Figure 1).

1.7.23 Upper module

An assembly of panels, posts and struts which together form an integral shoring system that is installed on top of lower or upper modules and connected together with connectors (see Figure 1).

1.7.24 Panel

The side walls of the unit which come into contact with the soil face (see Figure 1).

SECTION 2 SYSTEM AND COMPONENTS—DESCRIPTION AND EXAMPLES

2.1 COMMON TRENCH LINING SYSTEMS

2.1.1 General

Connection pins shall be secured with a suitable locking device.

2.1.2 Trench boxes

A trench box is an assembly of prefabricated panels and struts, which has been connected together to form a two- or four-sided shoring system. The system generally comprises lower and upper modules, which may be successively stacked on top of each other and connected together to enable the shoring to be used to greater depths. The strut/panel connection usually allows racking to facilitate installation by the dig and push method (see Figures 6 and 7).

Figures 1 and 2 illustrate typical trench boxes, Figure 1 showing a lower and upper module.

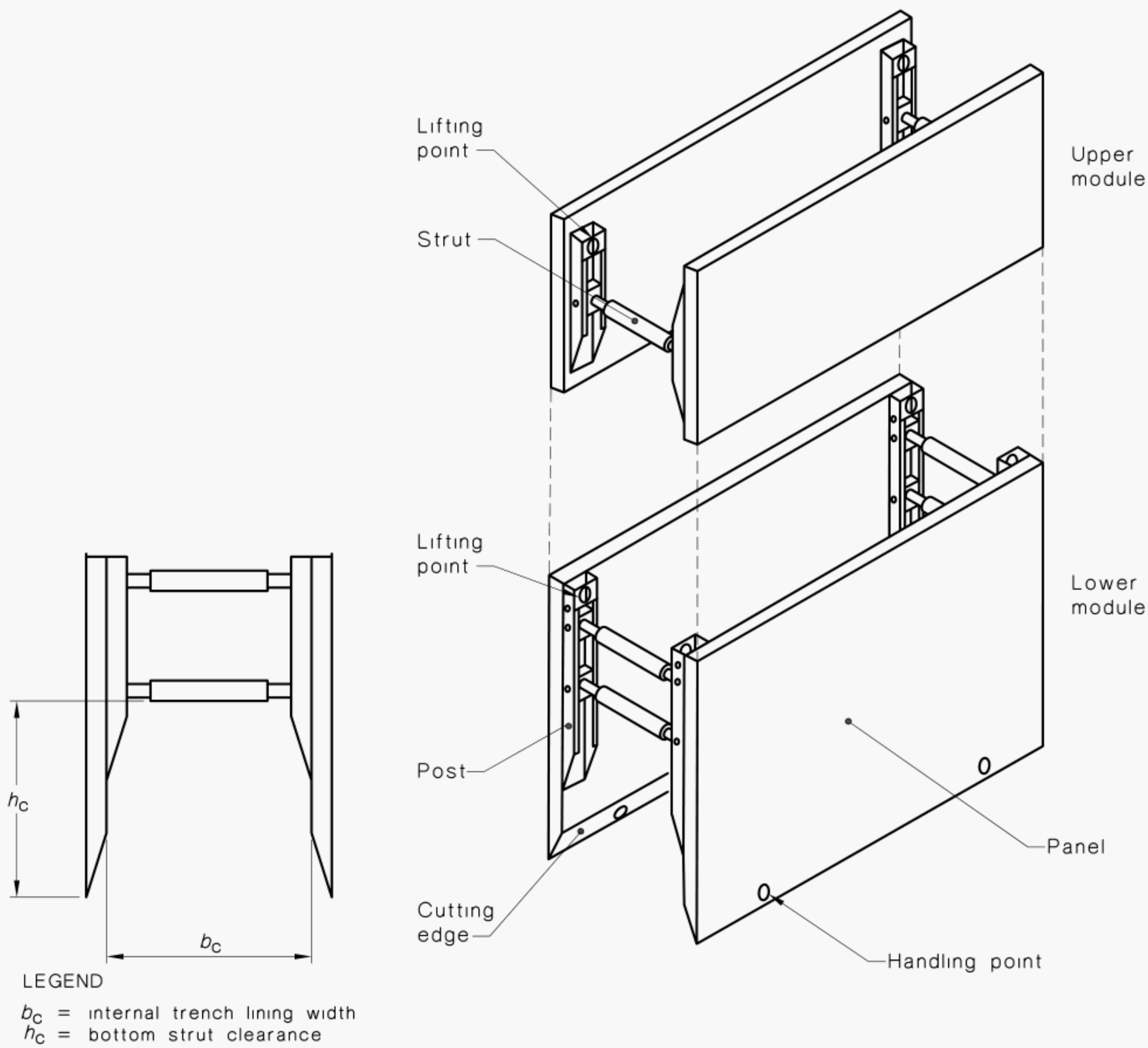

FIGURE 1 EXAMPLE OF A TYPICAL TRENCH BOX

© Standards Australia

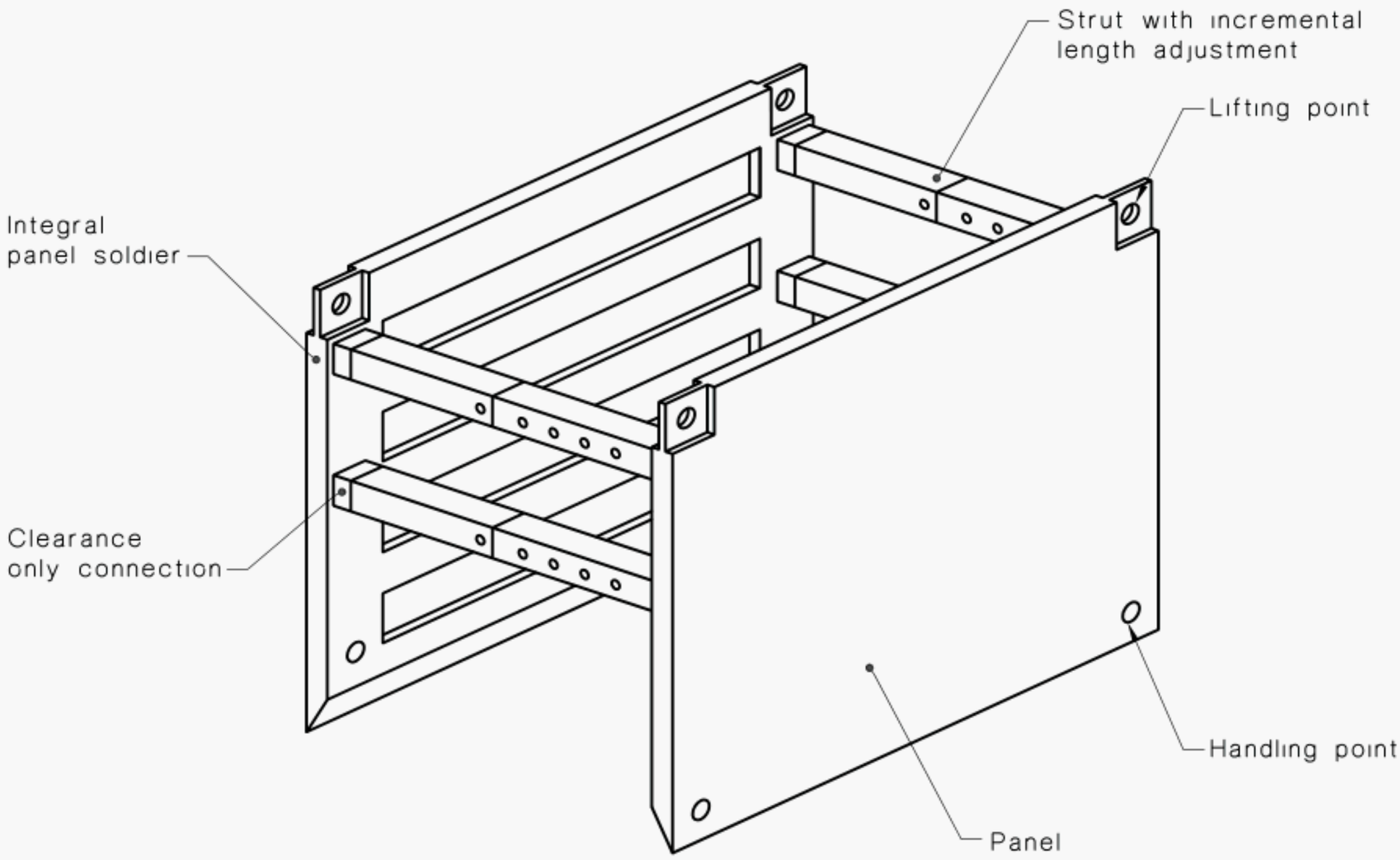

FIGURE 2 EXAMPLE OF A TYPICAL TRENCH LINING SYSTEM WITH AN INTEGRAL POST AND INCREMENTAL TELESCOPING STRUTS

2.1.3 Slide rail trench lining systems

Slide rail systems comprise modular panel sections which interlock at each end with grooved slide rail posts (see Figure 3).

Pairs of slide rails are used in conjuction with struts which together form a two-sided shoring system. The design of the rail is such that it limits movement to the vertical axis only, and the method of installation requires that the system be progressivley installed forming a continuously shored area.

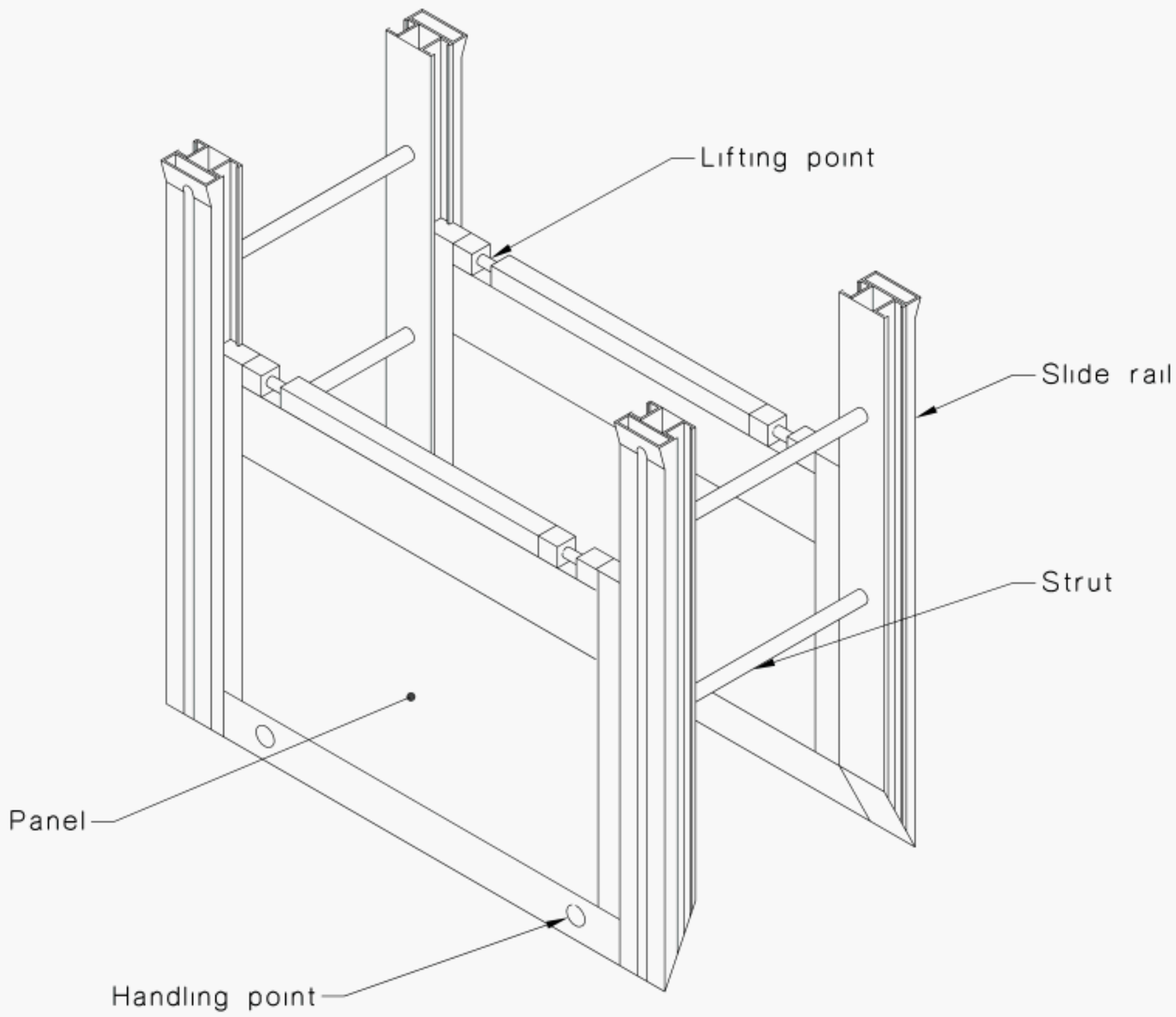

(a) Single panel type

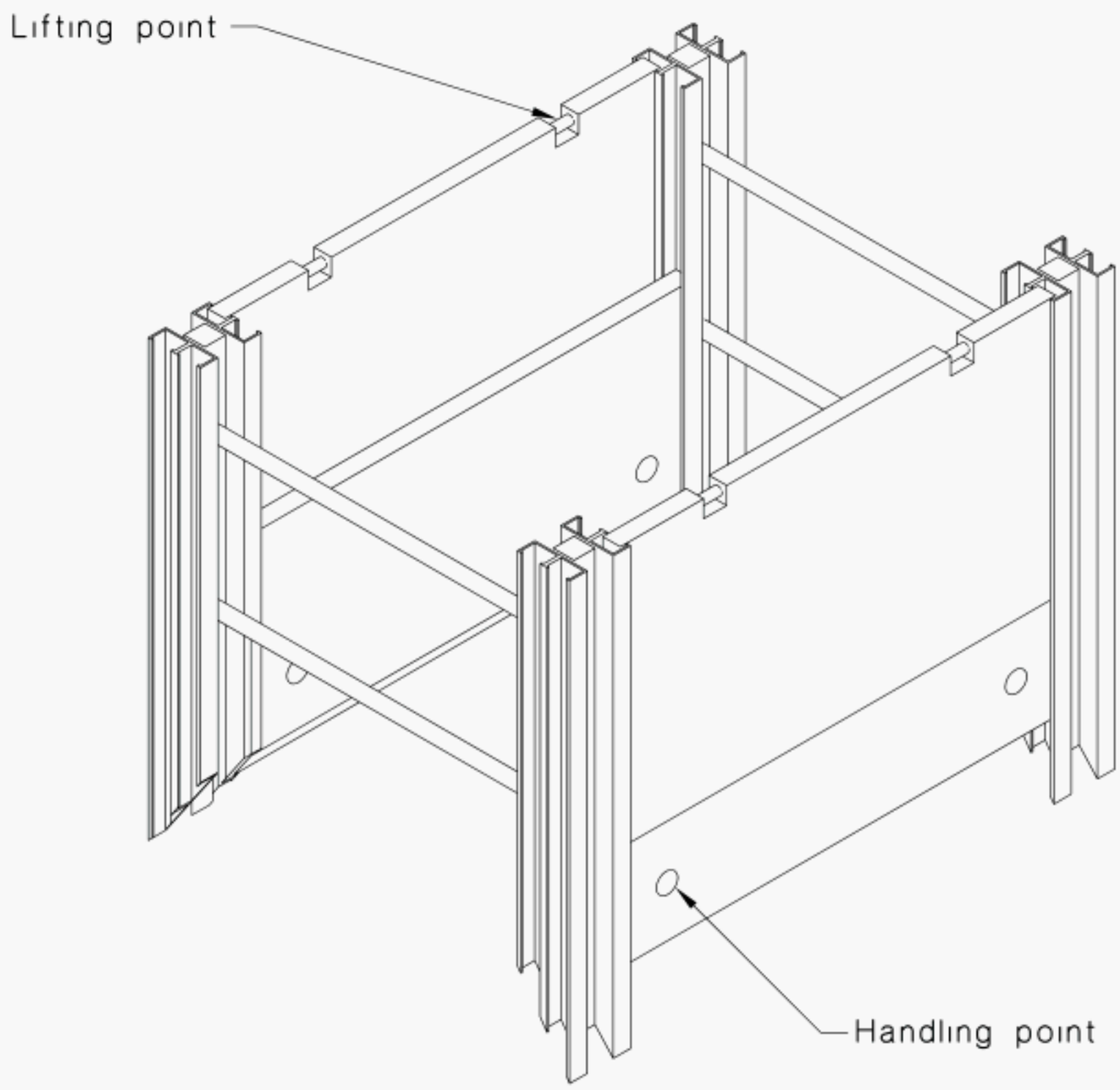

(b) Double panel type

FIGURE 3 EXAMPLE OF A SLIDE RAIL SHORING SYSTEM, DOUBLE PANEL TYPE

 © Standards Australia

2.1.4 Drag box

A drag box is a trench lining system which is dragged horizontally by its leading edge during the excavation process (see Figure 4).

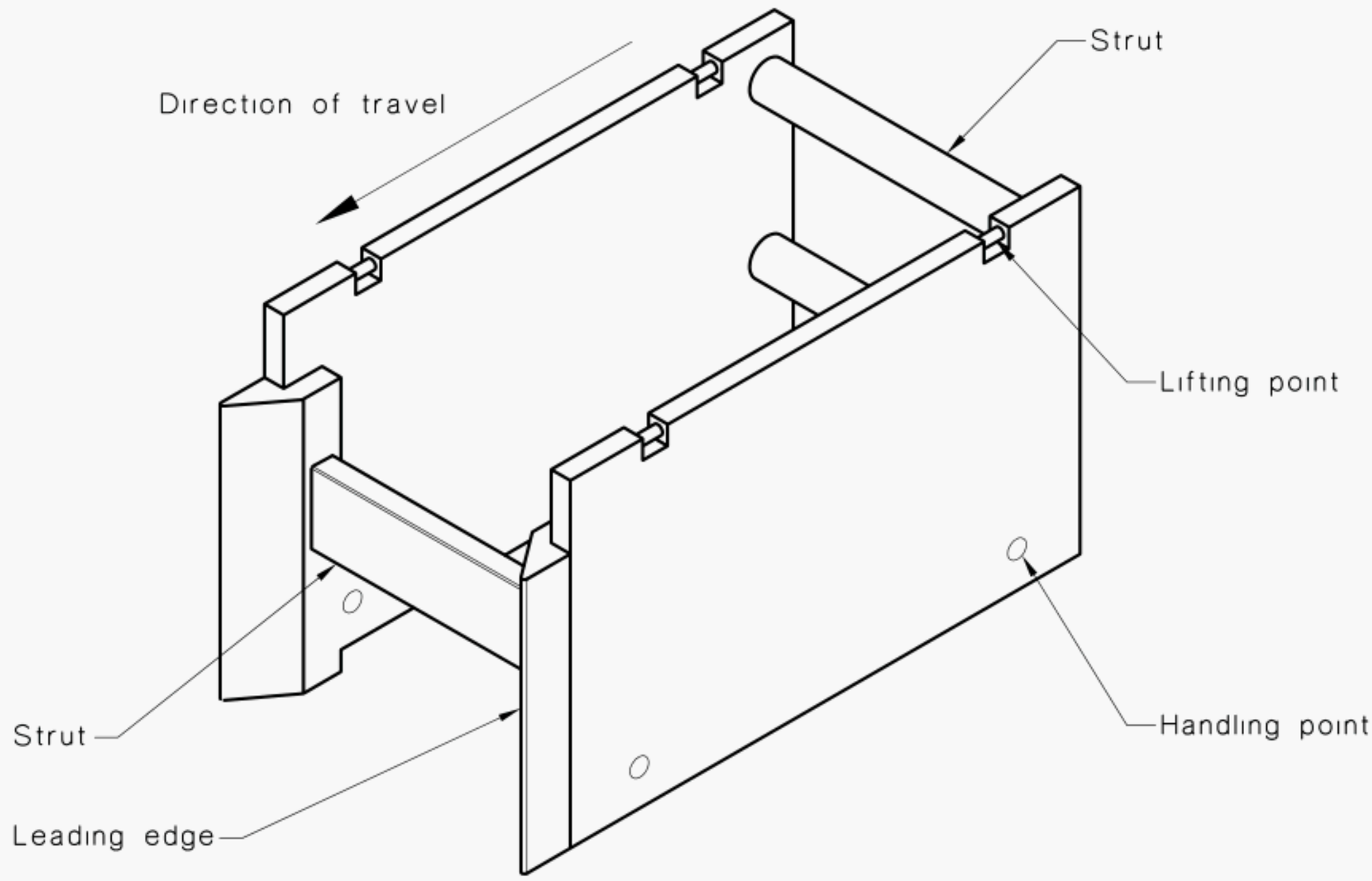

FIGURE 4 EXAMPLE OF A DRAG BOX

2.2 SUPPORTING COMPONENTS

2.2.1 Strut

A strut is a component that resists both compressive and tensile forces. Depending upon the shoring application it may also be subject to bending. The different forms of typical strut systems may be designated as Type i, Type ii or Type iii, as follows:

(a) *Type i* Strut with variable length adjustment, comprising threaded spindles, nuts and extension units. Rough length adjustment is carried out by adding or removing the extension units, thereafter fine adjustment can be made by adjustment of the threads (see Figures 5(a) and 5(b)).

(b) *Type ii* Strut with incremental length adjustment, comprising telescopic tubes with fixing holes and pins and/or extension bars. Only incremental adjustment is possible (see Figures 5(c) and 5(e)).

(c) *Type iii* Non-adjustable or 'fixed length' strut, i.e., no facility for adjustment (see Figure 5(f)).

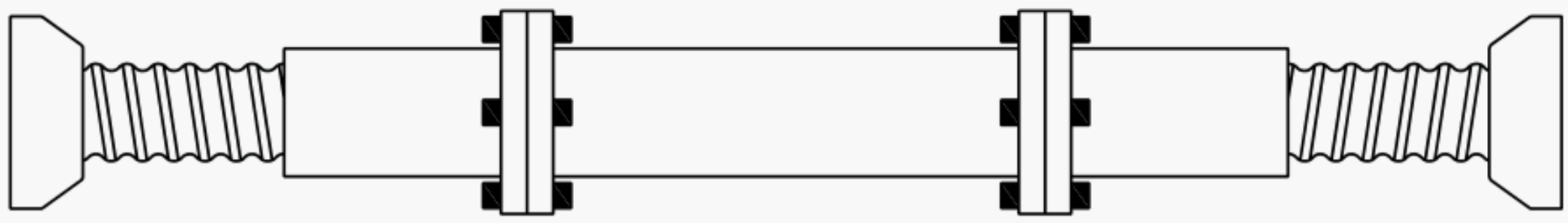

(a) Adjustable opposing screw threads

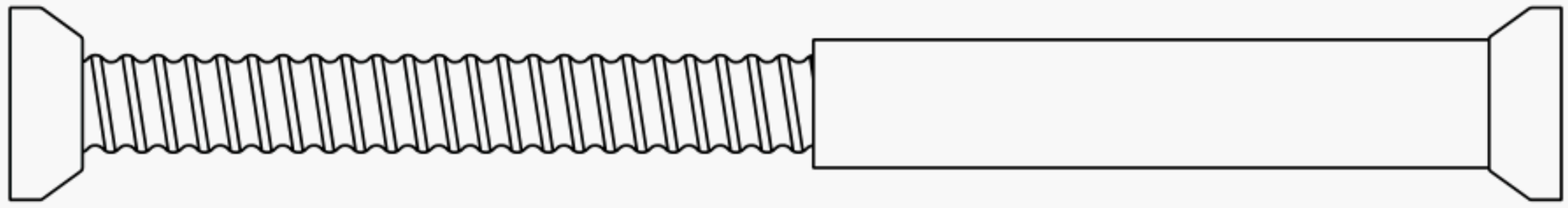

(b) Adjustable single screw thread

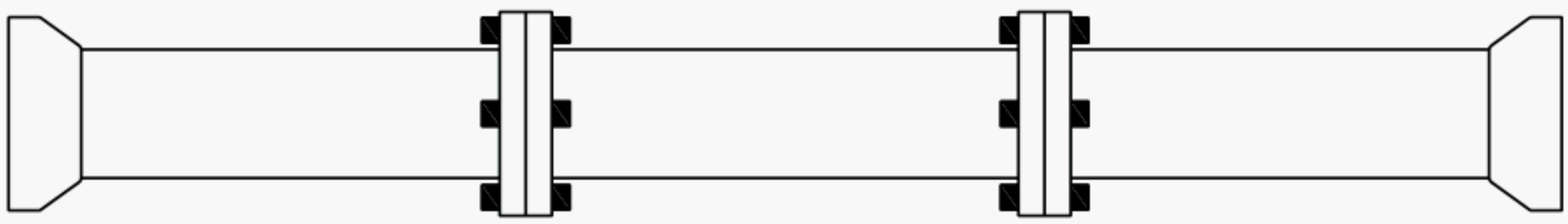

(c) Incremental bolted adjustment

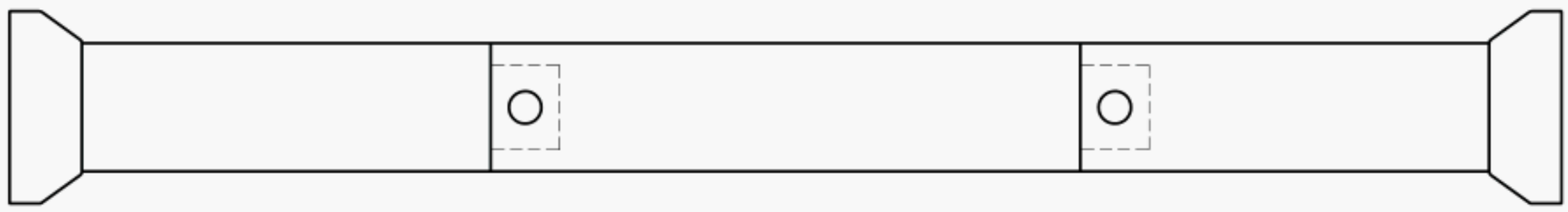

(d) Incremental pinned adjustment

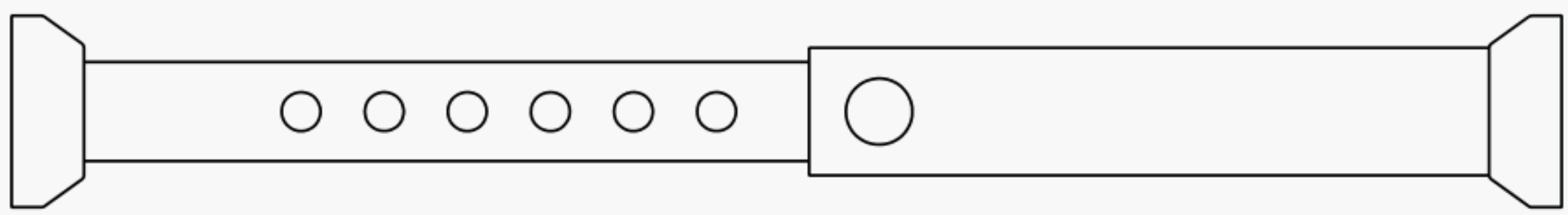

(e) Incremental telescoping adjustment

(f) Non-adjustable fixed strut

FIGURE 5 TYPICAL STRUT TYPES

© Standards Australia

2.2.2 Extension units

Extension units can comprise modular component or telescopic/threaded inserts securely connected to a strut in order to increase the overall strut length.

2.2.3 Post

A post is a component for transfering load between panels and struts (see Clause 1.7.12 and Figures 1 and 2).

2.2.4 Slide rail

See Clause 1.7.18 and Figure 3.

2.3 STRUT TO PANEL/SLIDE RAIL CONNECTION

2.3.1 Articulated connection

The connection between the post and strut utilizes a mechanical device(s) which limits the rotation of the strut at the point where it meets the post or slide rail (see Figure 6).

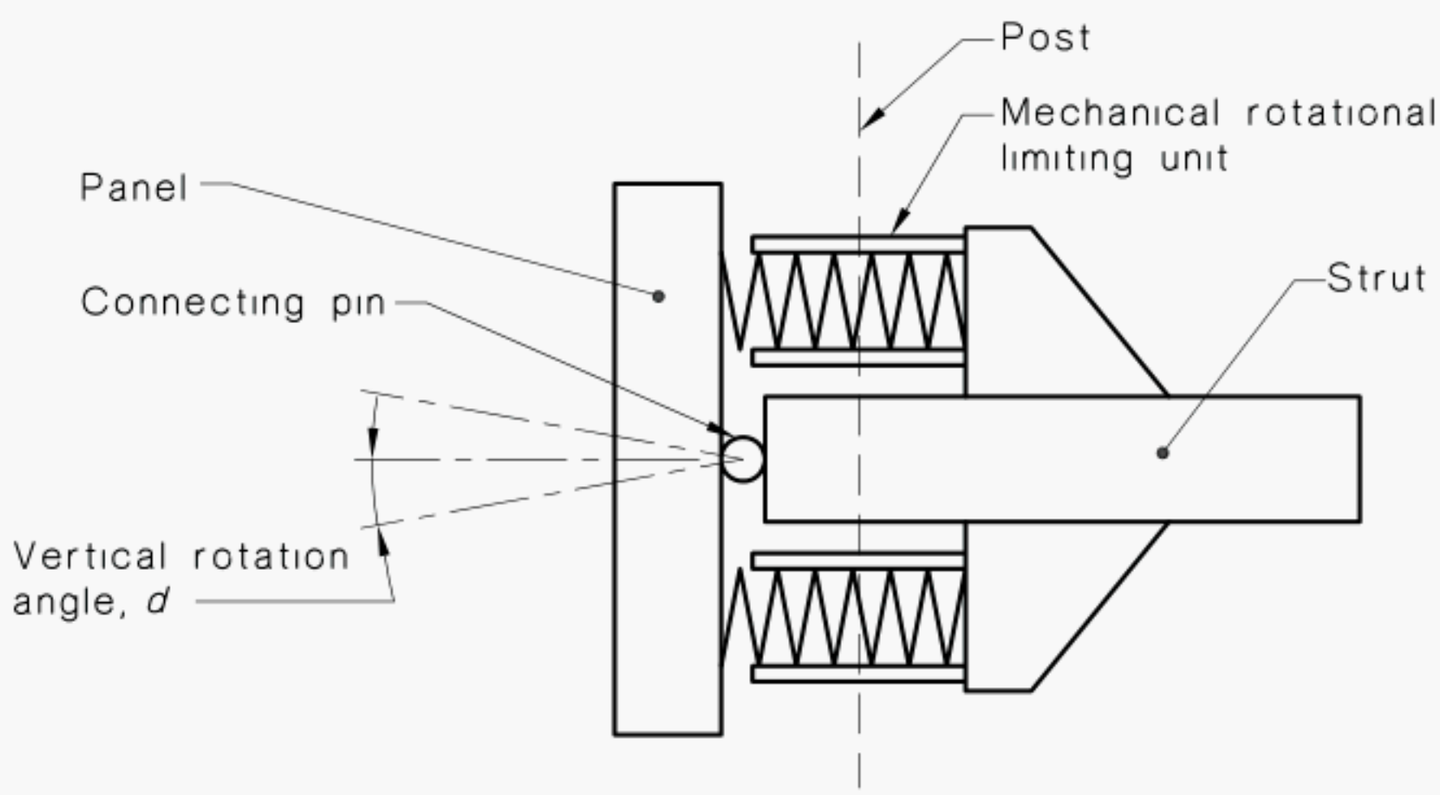

FIGURE 6 ARTICULATED CONNECTION

2.3.2 Clearance only connection

A clearance only connection is a connection that has gaps intentionally provided between the strut and panel to allow sufficient movement to occur (see Figure 7).

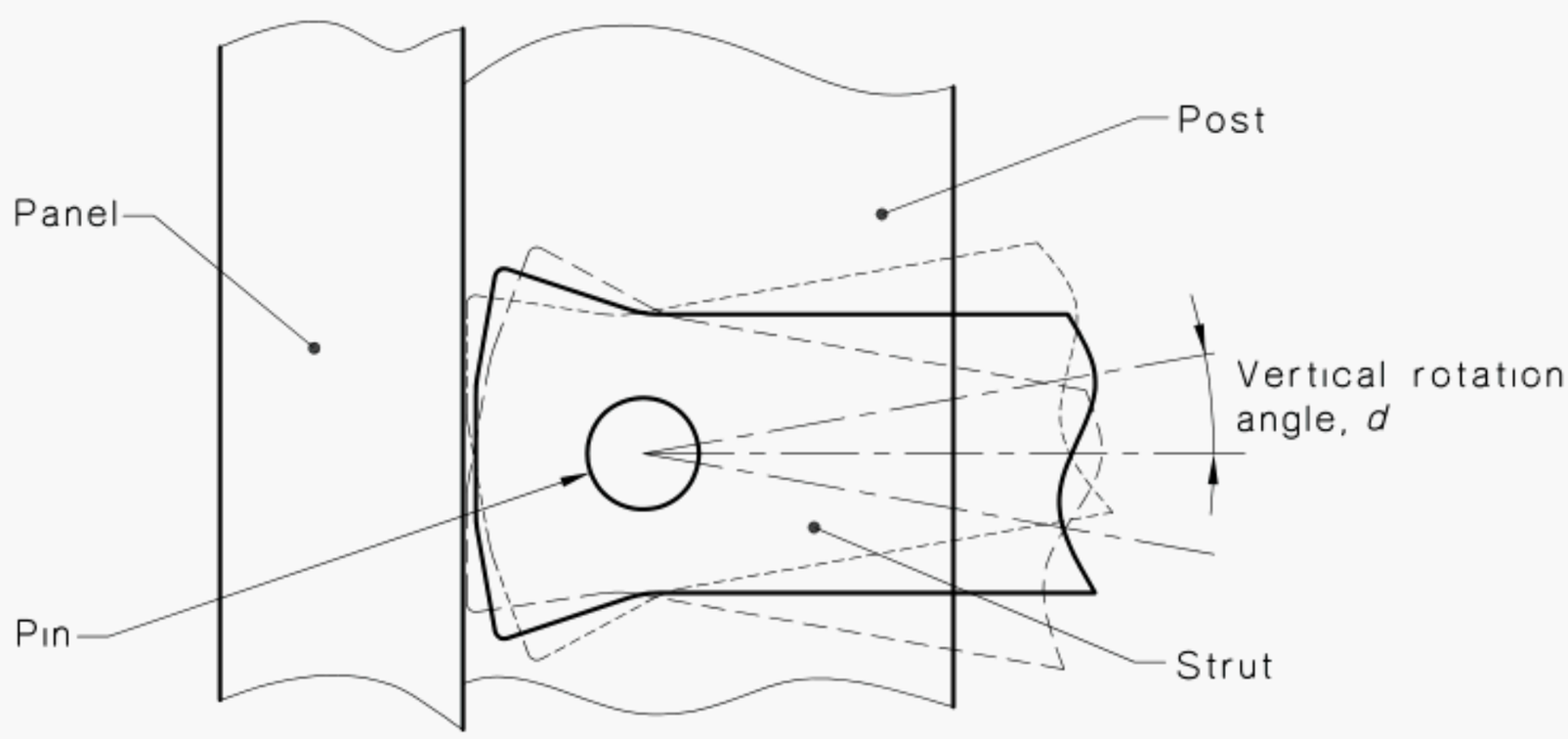

FIGURE 7 CLEARANCE ONLY CONNECTION

2.3.3 Fully restrained connection

A fully restrained connection between the strut and post/slide rail is a connection that allows no rotation (see Figure 8).

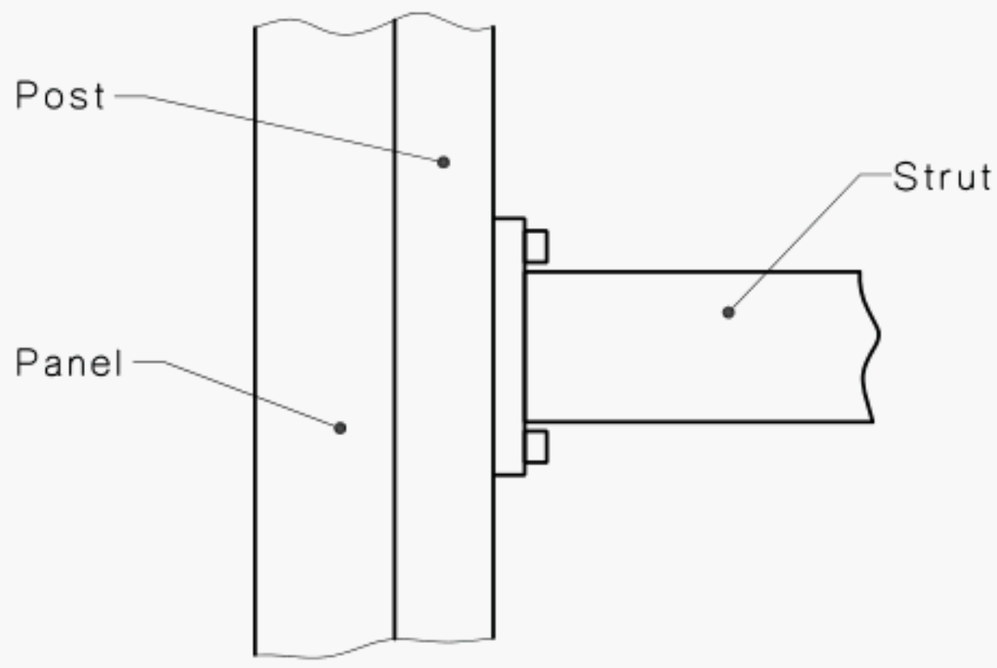

FIGURE 8 FULLY RESTRAINED CONNECTION

2.4 PANEL TO PANEL CONNECTIONS

2.4.1 Separate panel connector with pin

Figure 9 shows an example of a typical separate panel connector with pins.

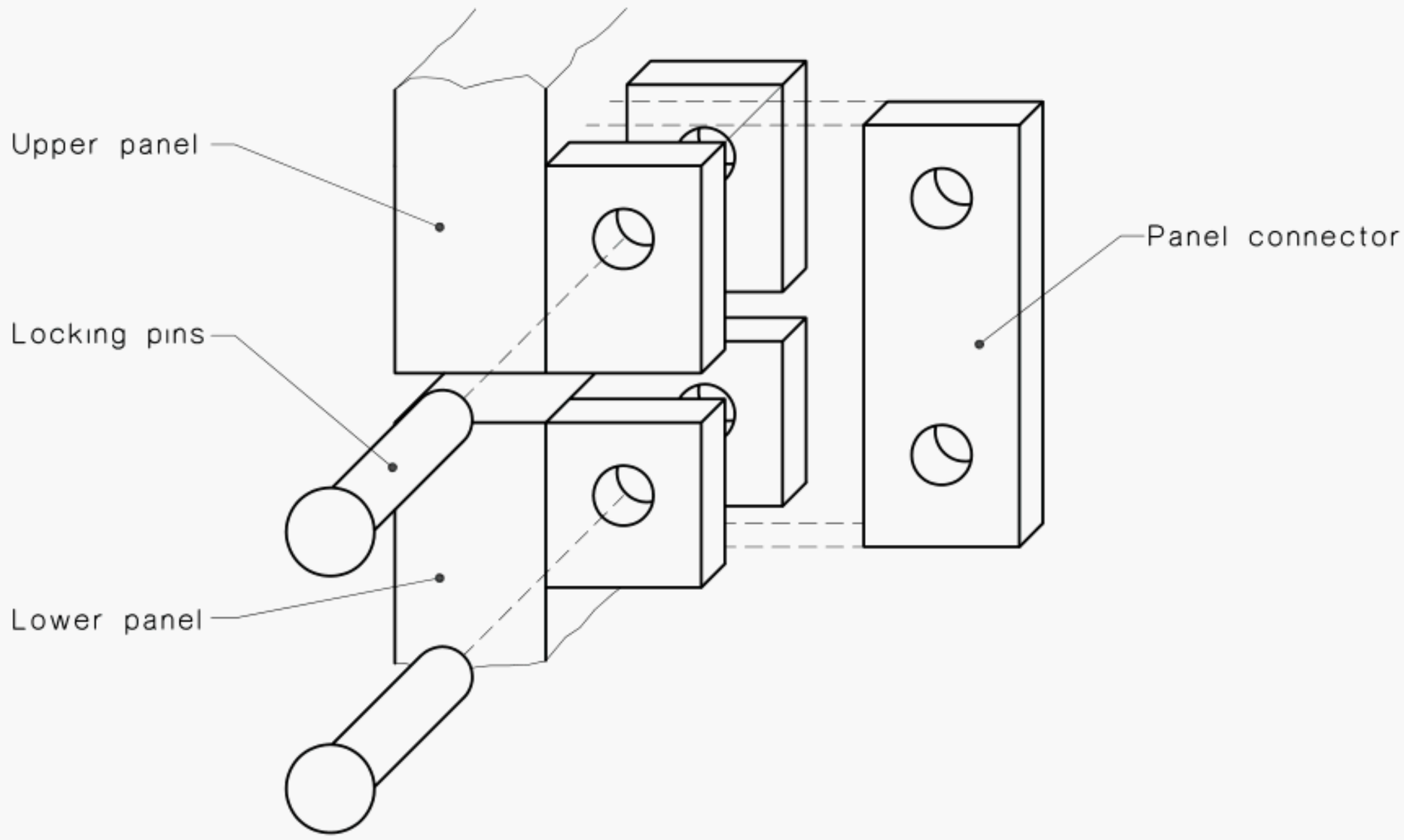

FIGURE 9 SEPARATE PANEL CONNECTOR WITH PIN

© Standards Australia

2.4.2 Integral panel connector with bolt

Figure 10 shows an example of a typical integral panel connector with bolt.

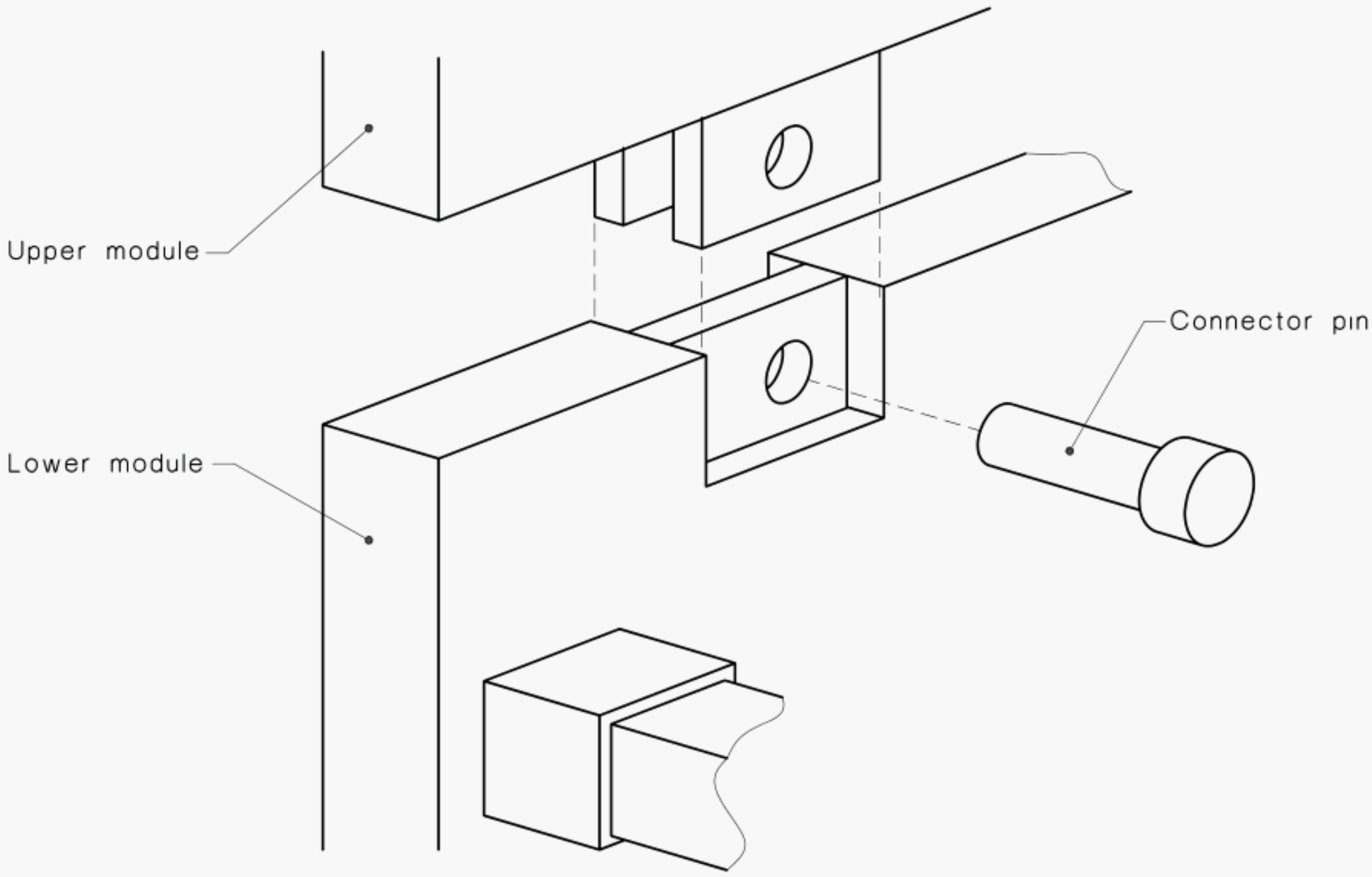

FIGURE 10 INTEGRAL PANEL CONNECTOR WITH BOLT

SECTION 3 DESIGNATION

3.1 PANEL DESIGNATION

Trench lining panel designation shall be set out in the following format:

Box Panel AS 4744 rated capacity (kPa)–dims. {length (m) × height (m) × thickness (m)} – weight (kg)

Example:

Designation of a 40 kPa rated panel, 3.6 m long, 2.5 m high, 0.1 m thick weighing 1.0 t would be expressed as follows:

Panel AS 4744—40 kPa – (3.5 m × 2.5 m ×0.1 m) 1000 kg.

3.2 STRUT DESIGNATION

Supporting componentry designation shall be set out in the following format:

Strut AS 4744 max. rated compression (kN)/max. rated tensile (kN) – maximum working length (m) – weight (kg).

Example:

Designation of a supporting component with rated compression resistance 290 kN, rated tensile resistance of 130 kN, at a maximum strut length of 4.00 m; and a weight of 75 kg would be expressed as follows:

Strut AS 4744—290 (kN)/130 (kN)–4.00 m–75 (kg)

3.3 SLIDE RAIL DESIGNATION

Slide rail designation shall be set out in the following format:

Slide rail AS 4744 rated moment capacity (kN/m)–length (m)–weight (kg).

Example:

Designation of a slide rail with rated moment capacity 350 kNm with a length 4 m and a weight of 650 kg would be expressed as follows:

Slide rail AS 4744 —350 kN/m–4 m–650 kg.

© Standards Australia

SECTION 4 MATERIALS

Materials shall have good resistance to, or be protected against, atmosheric corrosion, or both, and shall be free of any impurities and defects which might affect their performance.

All materials shall comply with at least one of the following Australian Standards:

AS

4100 Steel structures

1163 Structural steel hollow sections

3679 Structural steel

3679.2 Part 2: Hot-rolled steel bars and sections

AS/NZS

1594 Hot-rolled steel flat products

SECTION 5 DESIGN REQUIREMENTS

5.1 GENERAL REQUIREMENTS

All componentry shall be designed in accordance with AS 4199, as applicable.

The manufacturer shall declare the rated capacity of the trench lining system in Kilopascals (kPa) and the rated capacity of components shall be expressed as follows:

(i) Panels, P_k (kPa).

(ii) Slide rails, B_k (kNm).

(iii) Supporting components, F_{ck} (kN).

For design purposes, the most onerous condition shall be assumed. For example, this applies to the design pressure envelopes and where multiple strut locations are possible (see Figure 11).

The minimum partial safety factors for action and resistance shall be as specified in Appendix A and are further explained in Appendix B.

The rated system capacity and the rated component resistance shall be determined based on a uniformly distributed load in accordance with the load profiles given in Figure 11 where the applied earth pressure is taken as the maximum pressure found by application of an acceptable method and also complies with Clause 5.2

NOTES:

1 Appendix C gives guidance on the determination of earth pressures likely to be experienced by panels.

2 Appendix D gives information on typical ground parameters.

3 Appendix E gives information on additional loads.

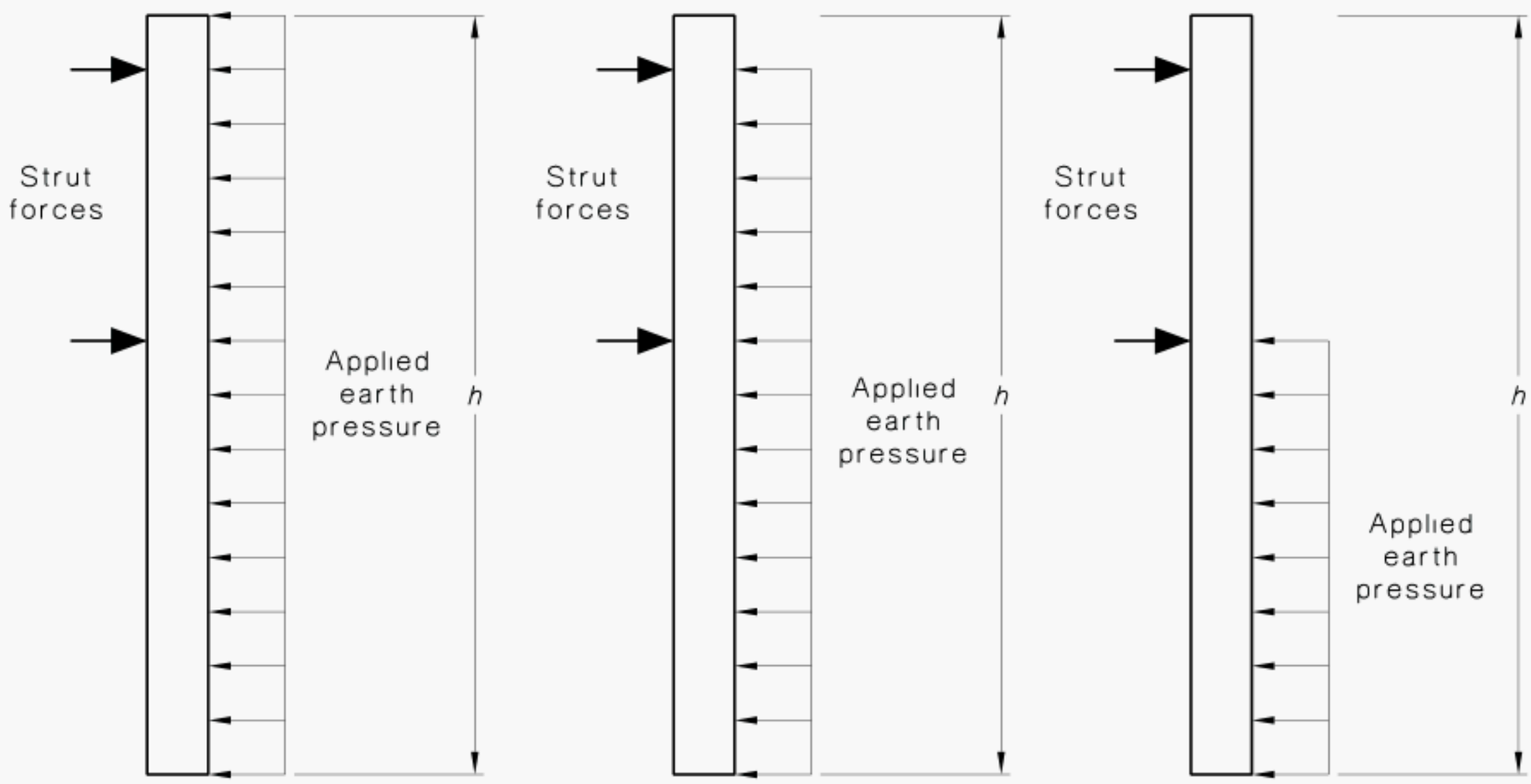

FIGURE 11 EXAMPLES OF TYPICAL PANEL LOAD PROFILES

© Standards Australia

5.2 MINIMUM RATED SYSTEM CAPACITY

The minimum rated system capacity shall be:

$$R_{k,min.} = 20\,\text{kPa}\,.$$

5.3 MAXIMUM ELASTIC DEFLECTION

The maximum elastic deflection of the panels and slide rails resulting from an applied load equal to the rated load shall be declared and shall satisfy the following:

$$deflection, \left(\frac{\Delta}{L}\right) \leq \frac{1}{60}$$

The deflection shall be expressed relative to the plane ABCD, and at the locations of maximum deflection, the most likely positions of which are shown in Figure 12

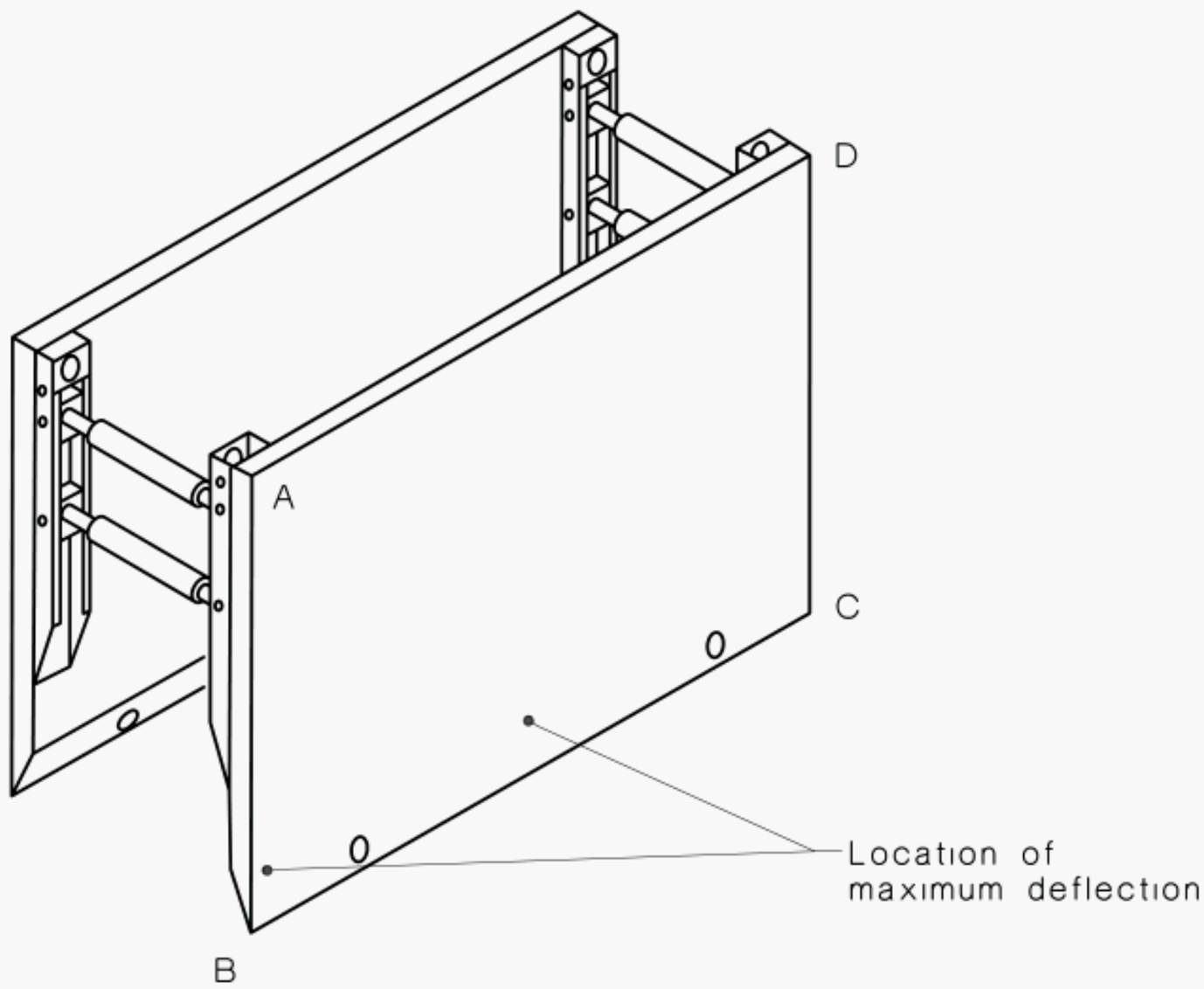

FIGURE 12 LOCATION OF MAXIMUM DEFLECTION

5.4 ATTACHMENT POINTS

5.4.1 Extraction points

All panels shall be provided with at least two extraction points.

Where panels are to be vertically connected, each panel shall have at least two connecting points. Extraction points may be used as connecting points.

5.4.2 Handling points

All panels shall have at least four handling points. Extraction or connecting points may be used as handling points.

5.4.3 Slide rails

Slide rails shall be provided with at least one extracting point, two handling points and one connecting point as required.

5.4.4 Lifting point angle

All extracting and handling points shall permit lifting devices to be connected and pulled at their rated capacity at any angle between vertical and 60° from vertical.

5.4.5 Extraction, connecting and pulling point design criteria

Extracting, connecting and pulling points shall have the following characteristic resistance R_{Ek} in the vertical direction:

$$R_{Ek} = \frac{R_k \times A_p \times \mu}{n}$$

where

R_k = the characteristic system resistance (see Appendix B)

A_p = the total area of the lower and all upper panels, in square metres

μ = the coefficient of friction, taken as 0.5

n = the number of extracting, connecting or pulling points up to a maximum of two

5.4.6 Drag box pulling point design critera

The resistance in horizontal direction for pulling points and leading end struts of drag boxes shall be calculated using the formula above.

5.4.7 Handling point design criteria

The characteristic handling point resistance shall be at least six times the load suspended from that point in any direction.

5.4.8 Location of handling points

If handling points and extraction points are provided, the handling points shall be located such that they cannot be used during extraction by mistake unless they have the same loadbearing capacity.

Handling points shall not be used as extraction points.

5.5 STRUTS

5.5.1 General

Struts shall be able to resist both tensile and compressive forces.

5.5.2 Minimum strut partial safety factor for action

The minimum strut partial safety factor shall be as follows:

$$\gamma_{FS} = 2.0$$

5.5.3 Maximum strut working length

A strut with a chosen rating for maximum compressive resistance (F_{ck}) shall also be rated for maximum strut working length (L_s).

Alternatively, a strut with a chosen maximum strut working length (L_s) shall also be rated for maximum compressive resistance (F_{ck}).

 © Standards Australia

5.5.4 Type (i) struts

5.5.4.1 *Screw thread external diameter (D_o)*

The external diameter of threaded outer tubes shall be greater than 60 mm ($D_o > 60$ mm) (see Figure 13).

5.5.4.2 *Screw thread internal diameter (D_i)*

The external diameter of inner tubes shall be greater than 45 mm ($D_i > 45$ mm) (see Figure 14).

5.5.4.3 *Minimum wall thickness (t)*

The wall thickness of tubes at any point including that where a thread has been cut shall be greater than 3 mm ($t > 3$ mm).

5.5.4.4 *Thread helix angle (α)*

The helix angle of the thread shall be less than 6° (a<6°).

5.5.4.5 *Thread depth (s)*

The thread depth shall be greater than 1.4 mm (s>1.4 mm) (see Figure 13 and Figure 14).

5.5.4.6 *Radial engagement (s_r)*

The radial engagement of the thread shall be greater than $0.4 \times s$ ($s_r > 0.4 \times s$) at maximum eccentricity (see Figure 15).

5.5.4.7 *Axial engagement (s_a)*

The axial engagement of the thread shall be greather than $0.7 \times D_o$ ($s_a > 0.7 \times D_o$ and greater than 50 mm ($s_a > 50$ mm) (see Figure 16).

5.5.4.8 *Minimum engagement*

The minimum engagement for a variable strut shall be maintained by mechanical stops.

5.5.4.9 *Angular misalignment (β)*

For variable or incremental struts the extent of angular misalignment shall not exceed 1.5° (–1.5°<ß<1.5°) at full extension (see Figure 16).

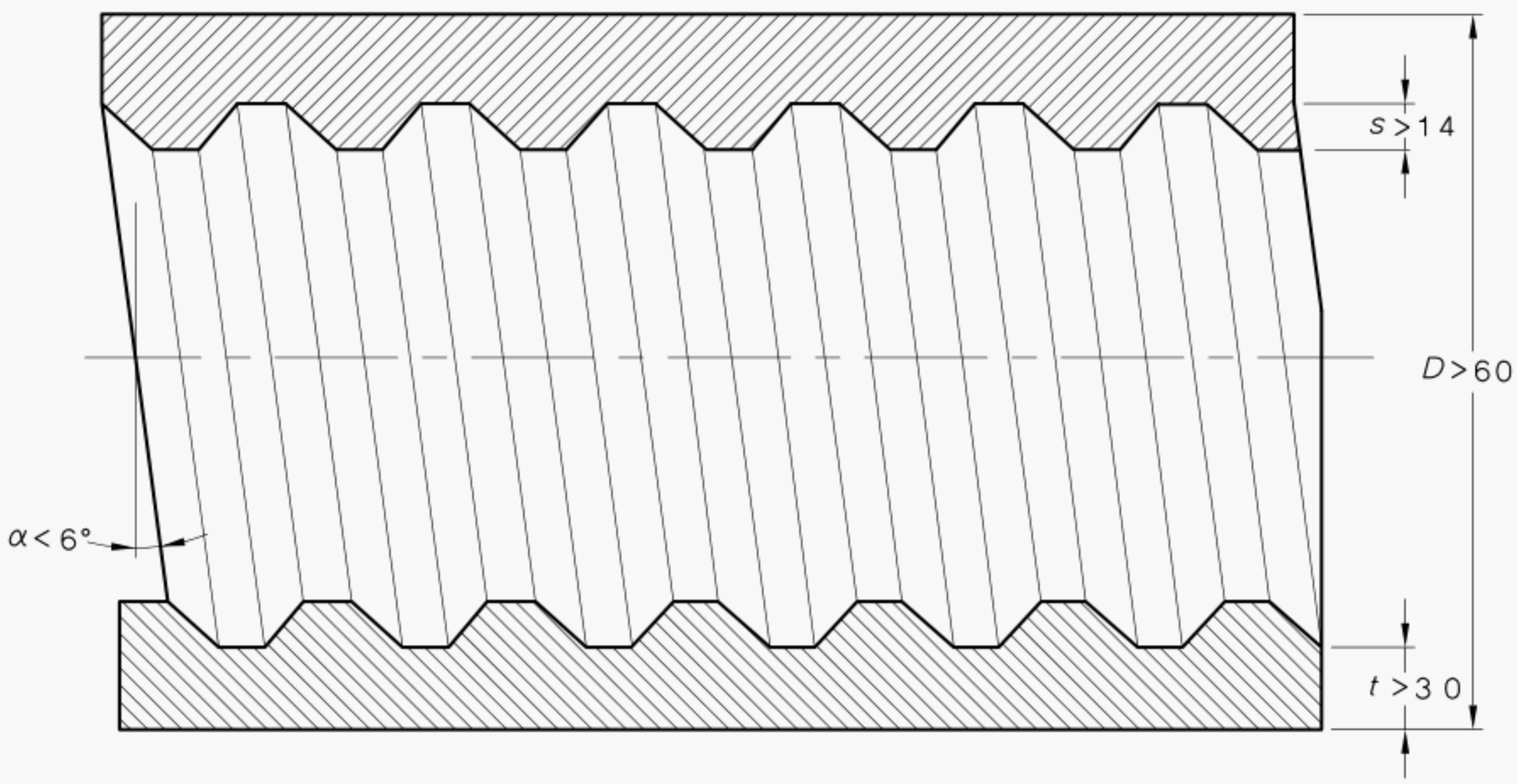

FIGURE 13 EXAMPLE OF AN OUTER TUBE WITH THREAD

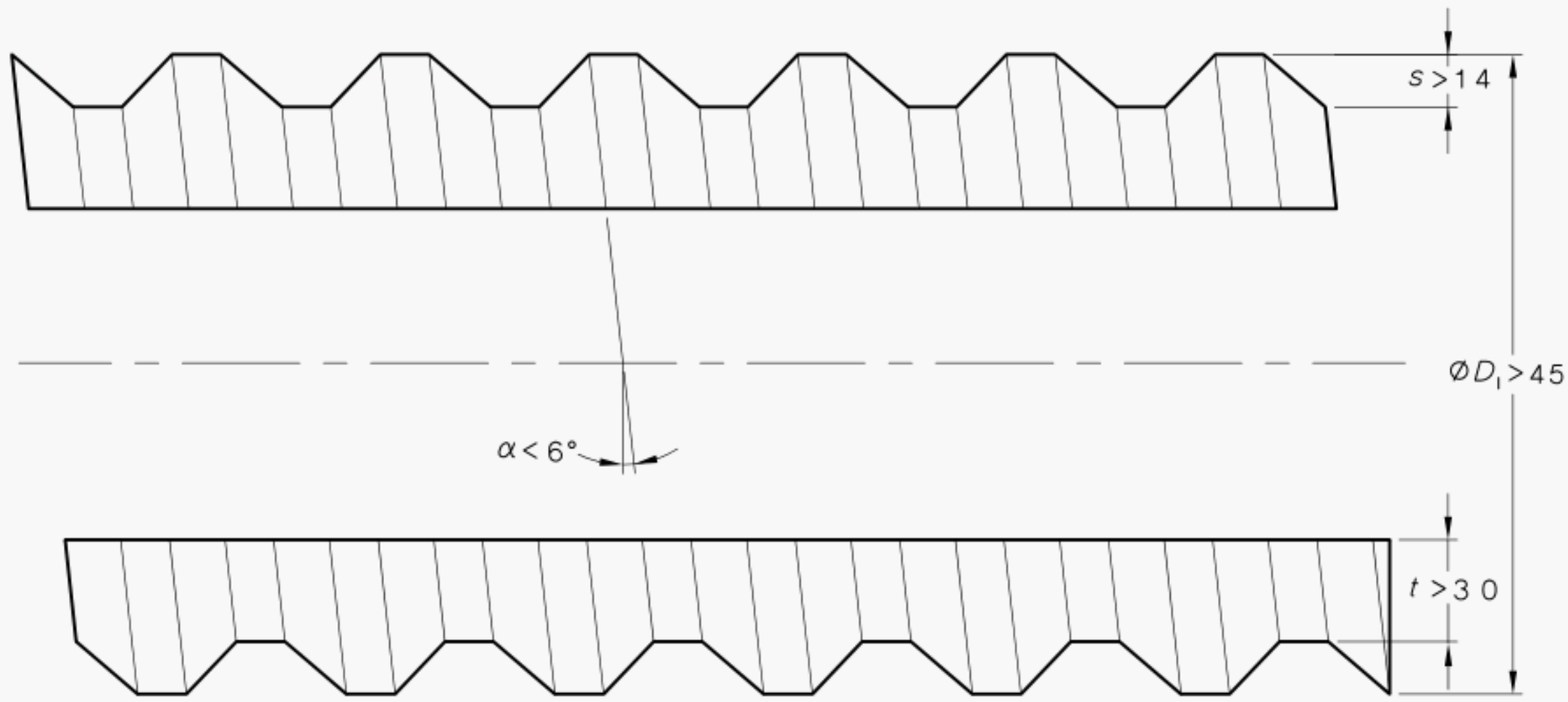

FIGURE 14 EXAMPLE OF AN INNER TUBE WITH THREAD

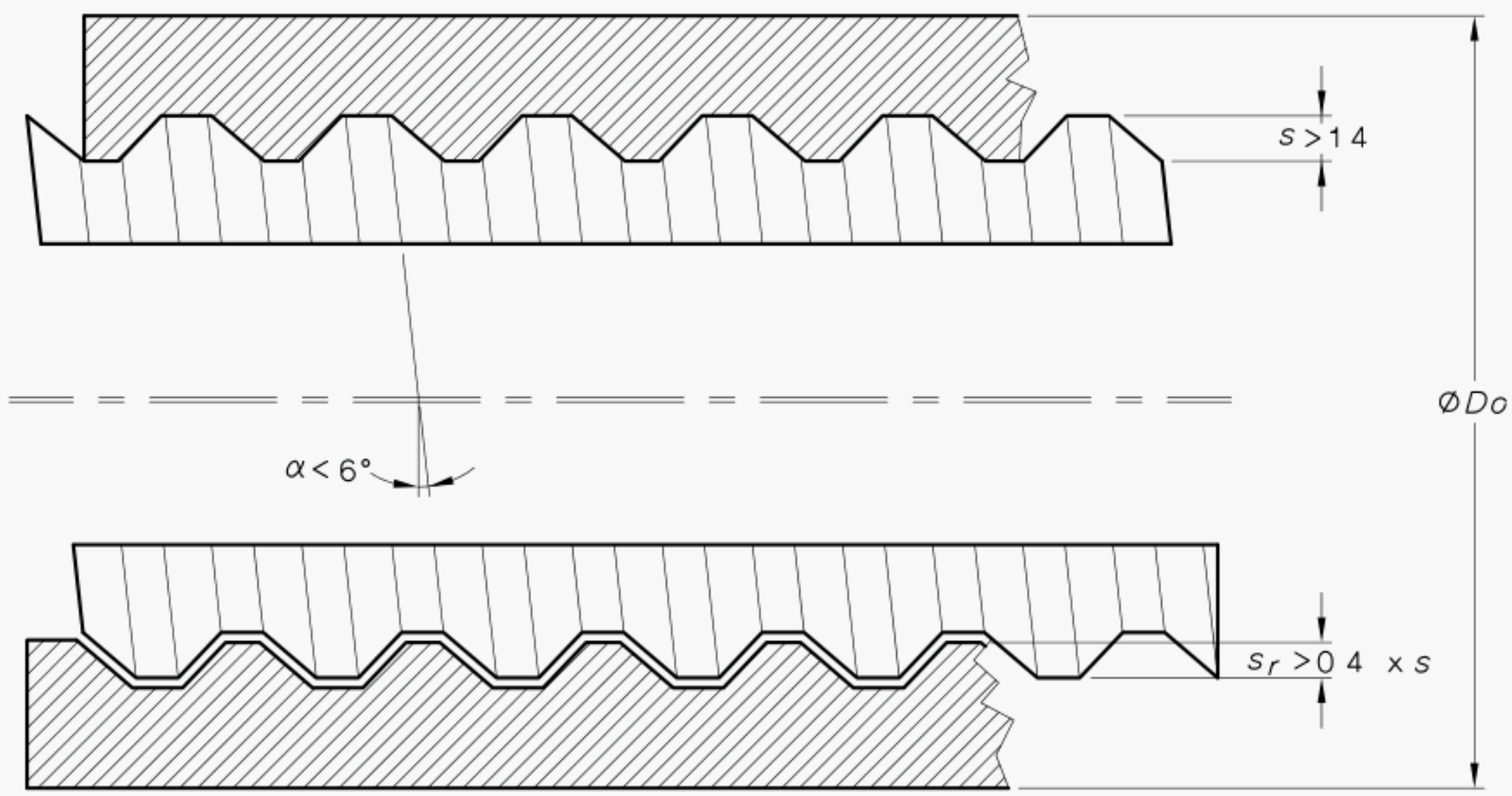

FIGURE 15 THREAD DEPTH AND RADIAL ENGAGEMENT FOR A VARIABLE STRUT — BETWEEN THREADED BAR AND OUTER TUBE

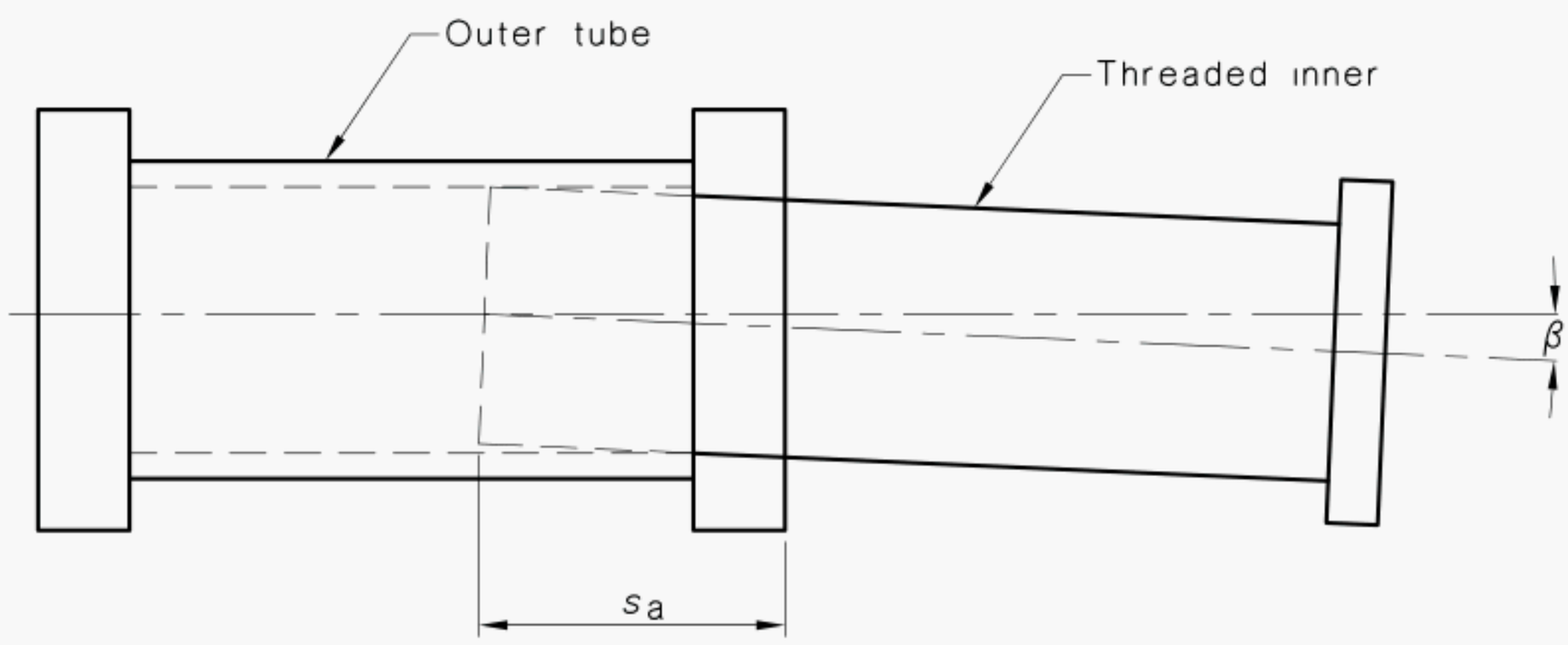

FIGURE 16 MAXIMUM ANGULAR MISALIGNMENT

© Standards Australia

5.5.5 Strut connection

All strut components shall be connected in such a way that they cannot be disengaged accidentally

5.5.6 Strut component connection

Flanges connecting extension components shall be provided with at least four bolt holes for bolts.

5.5.7 Drag box leading strut

In the case where the pulling force is applied to the leading end strut, the strut shall be capable of transferring this force to the panels.

NOTE: This force can be applied from the bucket of an excavator.

5.6 STRUT TO PANEL OR SLIDE RAIL CONNECTION

5.6.1 Vertical strut to panel rotation

The possible rotation angle in a vertical plane between articulated or clearance only strut connection and panel or slide rail shall not exceed $d = \pm 8°$ (see Figure 6 and Figure 7).

5.6.2 Horizontal strut to panel rotation

The possible rotation angle in the horizontal plane between articulated or clearance only strut connection shall not exceed $e = \pm 4°$.

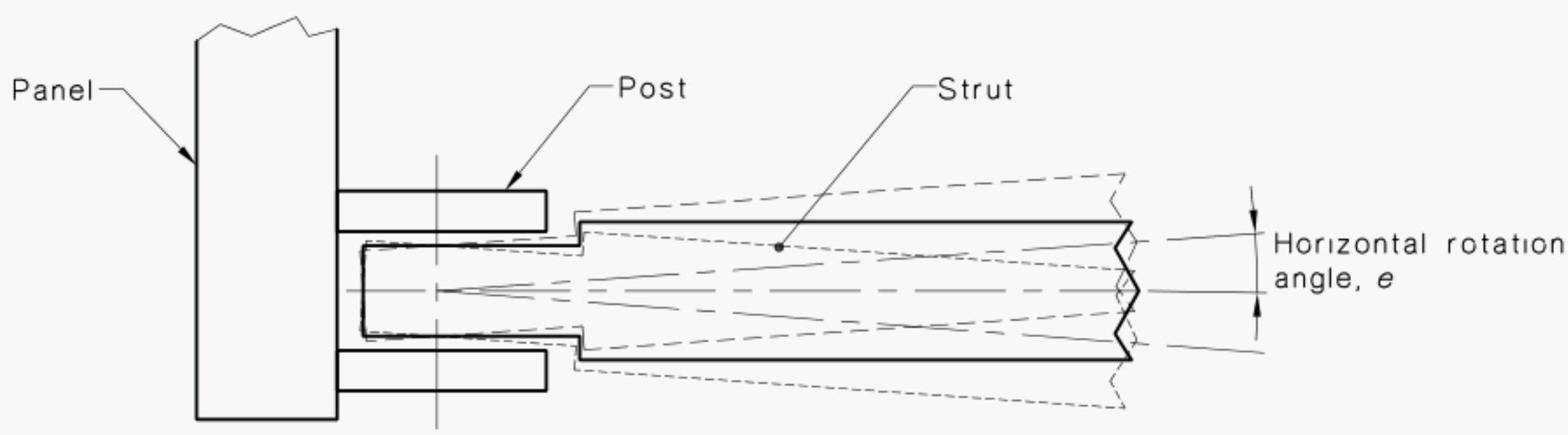

FIGURE 17 PLAN VIEW OF A STRUT/POST CONNECTION

5.6.3 Drag box connections

The connections between drag box panels and leading end struts shall be fixed.

5.6.4 Strut to panel/slide rail connections

Strut to panel or slide rail connections shall be able to resist compr essive and tensile forces. They also shall be designed such that they are able to resist characteristic moments without plastic deformations of the metallic components. These moments shall be declared in the technical specification.

SECTION 6 INSTRUCTION MANUAL

6.1 GENERAL REQUIREMENTS

A set of instructions forming a manual shall be provided by the manufacturer.

6.2 PRINCIPAL CONTENTS

The main contents shall include the following:

(a) A list giving each component, its weight and a description from which it can be identified.

(b) Instructions for the sequence of assembly and dismantling the components and correct handling procedure.

(c) Full information on lifting, handling, and extracting the shoring.

(d) Limitations on the assembly of components and use of the trench lining system which shall include—

  (i) maximum allowable strut working length (m);

  (ii) rated panel capacity (kPa); and

  (iii) maximum depth.

(e) Measures to minimize hazards; for example, possible instability due to wind loading, sloping or uneven ground, soft ground, and accidental collisions.

(f) All allowable configurations together with the rated system capacity and respective dimensions.

(g) Guidance on relating the rated system capacity to site conditions by diagrams or equivalent (see Appendix C).

(h) Allowable pulling forces that may be imposed on the extraction, lifting and handling points.

(i) Any instructions for storage, maintenance or repair which the manufacturer considers appropriate.

(j) Data on deflection relevant to the shoring system used.

(k) The maximum moment of the strut to panel/slide rail connection specified, if applicable.

(l) The specification of the tightening torque for bolts and screws.

(m) How to obtain further information should the circumstances of the potential application be outside the content of the instruction manual.

(n) Guidelines for undertaking routine inspection, repairs and maintenance. Criteria for rejecting components that are worn or damaged.

 © Standards Australia

SECTION 7 MARKING

Panels, supporting components and slide rails shall be marked with the following:

(a) The component designation in accordance with Section 3.

(b) Manufacturer's identity.

(c) The year and month of manufacture, using at least two figures for the year and two figure for the month.

(d) A serial number, which allows the manufacturer to identify the individual component.

The size of the lettering shall be greater than 10 mm and should take into account the size of the component. Marking should be arranged so that it will remain legible for the life of the component.

Indentification for panels should be located on the inside face.

SECTION 8 EVALUATION OF CONFORMITY

8.1 DECLARATION

The manufacturer shall declare that the trench lining system conforms to the requirements of this Standard.

8.2 PROVISION OF SPECIFICATIONS

For evaluation of conformity the manufacturer or supplier shall provide in addition to the instruction manual:

(a) The technical specification of each component, dedicated or otherwise.

(b) The description of the structural configuration assessed.

© Standards Australia

APPENDIX A

PARTIAL SAFETY FACTORS

(Normative)

Calculations for the determination of the trench lining system rated capacity shall be based on the following:

$\gamma_F \geq 1.5$

$\gamma_M \geq 1.1$

If reference Standards indicate higher partial safety factors for special components, these factors shall be taken into account.

For the determination of rated capacity from test results, the material partial safety factor:

$\gamma_M \geq 1.2$

applies.

APPENDIX B

RELATIONSHIP BETWEEN LOADS AND RESISTANCE

(Informative)

An explanation of how to obtain the characteristic and the design system resistances and characteristic and rated load capacities is given in Figure B1.

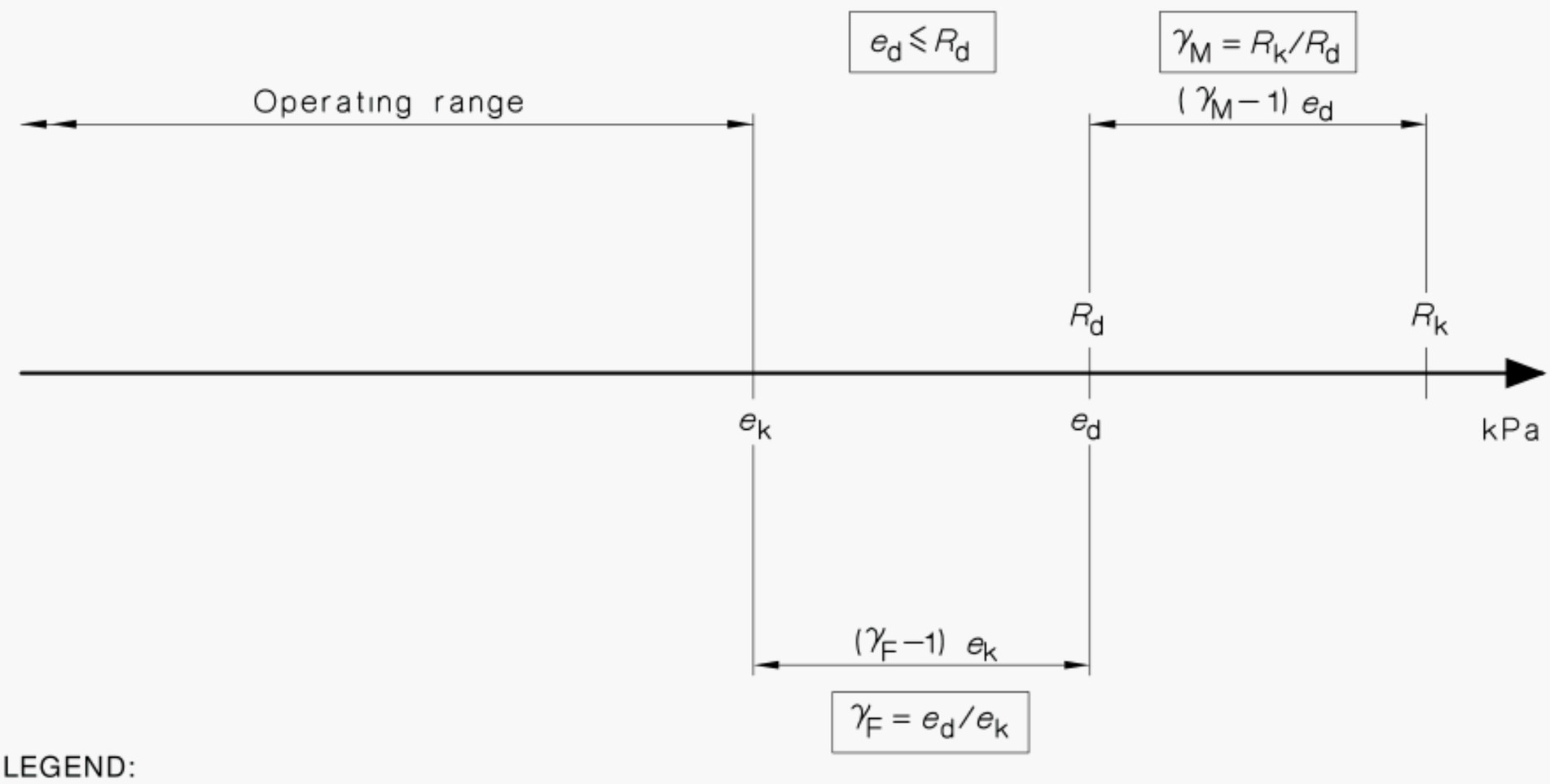

LEGEND:

e_d = design load ($e_d < R_d$)
e_k = rated load
R_d = design system resistance
R_k = characteristic system resistance
γ_M = partial safety factor for action = R_k/R_d
γ_F = partial safety factor for resistance = e_d/e_k

FIGURE B1 RELATIONSHIP BETWEEN RATED AND DESIGN CAPACITY

© Standards Australia

APPENDIX C

DETERMINATION OF EARTH PRESSURES AND STRUT LOADS USING EMPIRICAL PRESSURE ENVELOPES

(Informative)

The determination of earth pressures using empirical pressure envelopes is based upon loads measured in struts used for bracing cuts. This data was then used to formulate pressure envelopes.

The envelopes, which take into account the variations in strut load which occur in practice, are assumed to be trapezoidal in form, the magnitude of the loading diagram being the function of the ground type.

The most frequently used diagrams are those developed by Terzaghi and Peck* which were subsequently modified by Peck. For granular and mixed soil types, the water and surcharge pressure should be added to the diagram to enable the prop forces to be calculated. No allowances should be made for continuity of the wall when using this method, each support load being calculated from a summation of the appropriate parts of the pressure envelope. Using the ground pressure envelope each load is simply the summation of the appropriate tributary area of the diagram. This load is the maximum likely to occur from ground pressure and no additions for soil arching are required; however, a professional engineer should assess the loads and stability arising from groundwater and surcharge effects.

This method of analysis is not recommended for the calculation of bending moments.

---

* Terzaghi, K. and Peck, R.B., *Soil Mechanics in Engineering Practice*. Wiley, New York 1967.

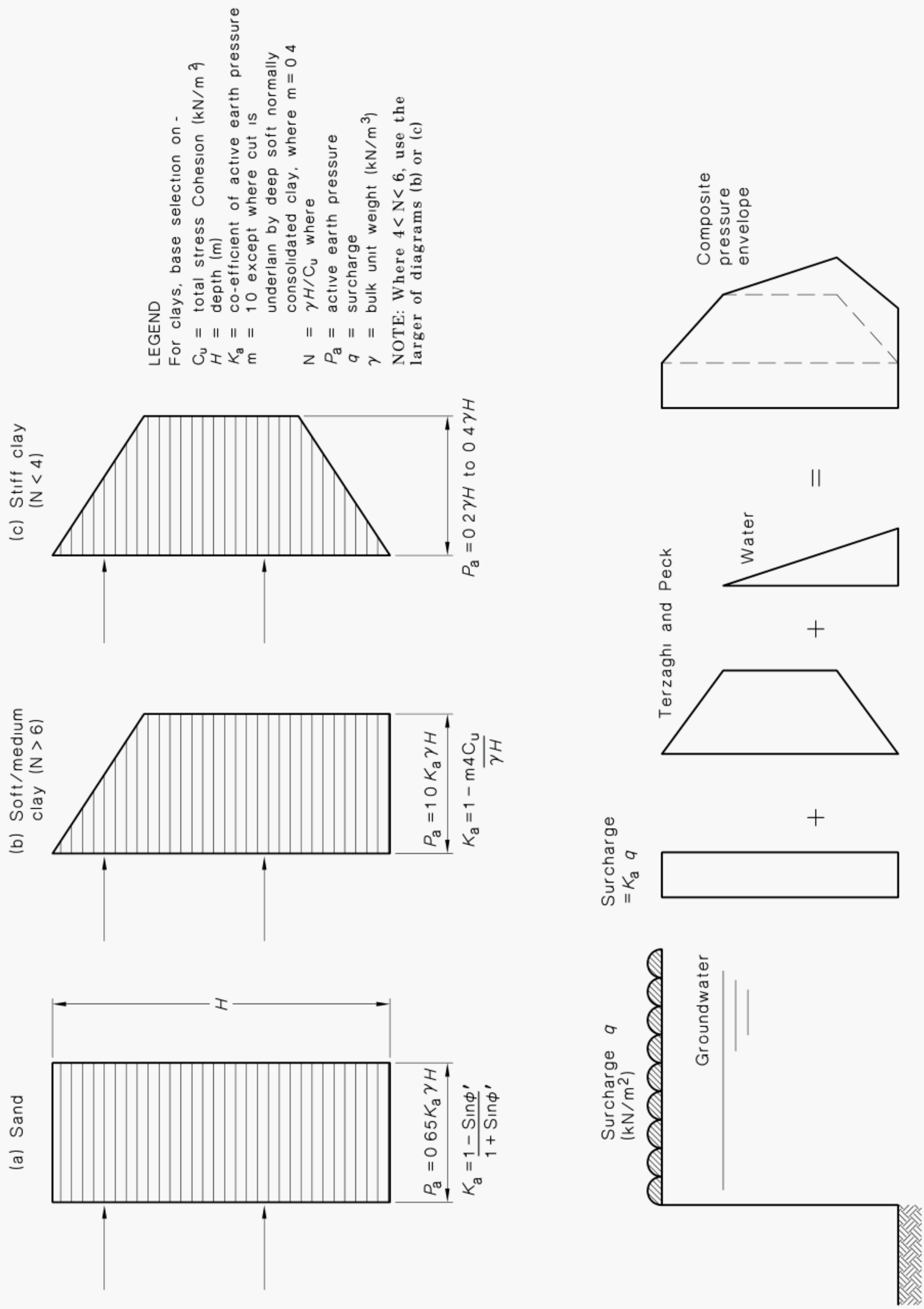

FIGURE C1 ACTIVE PRESSURE DIAGRAMS RELATING TO MAXIMUM STRUT LOADS IN BRACED RETAINING STRUCTURES

Accessed by UNIVERSITY OF SOUTH AUSTRALIA on 16 Mar 2017 (Document currency not guaranteed when printed)

APPENDIX D

TYPICAL GROUND PARAMETERS

(Informative)

Type of material	Bulk unit weight γ_b (kN/m^3)		Saturated bulk unit weight γ_s (kN/m^3)		Effective friction angle ϕ' (degrees)		Total stress cohesion C_u (kN/m^2)
	Loose	Dense	Loose	Dense	Loose	Dense	
Gravel	16.0	18.0	20.0	21.0	35	40	—
Well graded sand and gravel	19.0	21.0	21.5	23.0	35	40	—
Coarse or medium sand	16.5	18.5	20.0	21.5	35	40	—
Well-graded sand	18.0	21.0	20.5	22.5	35	40	—
Fine or silty sand	17.0	19.0	20.0	21.5	30	35	—
Rock fill and quarry waste	15.0	17.5	19.5	21.0	40	45	—
Brick hardcore	13.0	17.5	16.5	19.0	40	45	—
Slag fill	12.0	15.0	18.0	20.0	30	35	—
Ash fill	6.5	10.0	13.0	15.0	35	40	—
Topsoil	16.0	19.0	20.0	21.0	25		—
River mud	14.5	17.5	19.0	20.0	5–10		—
Silt	18.0		18.0		25		—
Peat	12.0		12.0		15		—
Very soft clay	16.0		16.0		—		C_u <20
Soft clay	17.0		17.0		—		20 ≤C_u <40
Soft to firm clay	17.5		17.5		—		40 ≤C_u <50
Firm clay	18.0		18.0		—		50 ≤C_u <75
Firm to stiff clay	18.5		18.5		—		75 ≤C_u <100
Stiff clay	19.0		19.0		—		100 ≤C_u <150
Very stiff or hard clay	20.0–21.0		20–21		—		150 ≤C_u

APPENDIX E

ADDITIONAL LOADS

(Informative)

E1 IMPOSED LOADS IMPARTED ON TRENCH SHORING DURING CONSTRUCTION

The most likely additional loads are those from construction plant, soil heaps and adjacent structures. These can usually be represented by a uniform surcharge or by a concentrated or linear surcharge in various combinations.

E2 CONSTRUCTION PLANT

A minimum uniform surcharge of 10 kPa should be used to allow for plant up to 30 tonne loaded weight, this can increase to 20 kPa for plant up to 60 tonne loaded weight.

Larger items of plant or plant working adjacent to the shoring should be considered on an individual basis by representing the loads from tracks and wheels as concentrated surcharges. This approach allows for the dissipation of loading within the ground as the depth increases, which does not occur with a uniform surcharge.

Working cranes and excavators can give rise to very heavy loads on one side of the machine due to loads held at a distance from the machine. It is suggested that the total weight of machine plus the machine's rated load be assumed to bear wholly on the machine supports closest to the excavation.

E3 SOIL HEAPS

A soil heap, if it is not great in size, can be represented by a concentrated surcharge, otherwise a uniform surcharge equivalent to the height of the heap times its own unit weight should be used.

E4 ADJACENT STRUCTURES

Adjacent structures may be represented by surcharge loads at the appropriate depths. Loads from footings can be represented by a linear surcharge if they are parallel to the trench, or by a concentrated surcharge if normal to it. It is important to note that buildings are extremely sensitive to ground movement. Any proposed trench shoring located close to buildings (i.e. the trench may be affected by loads from footings) should be assessed by a professional engineer.

E5 LATERAL PRESSURE ON THE SHORING DUE TO LOADS OTHER THAN UNIFORM SURCHARGE

For granular soils, Krey's simple method has been used for surcharges of limited area:

Let

Q_c = concentrated load in kN

Q_L = line load in kN/m run of wall

For a concentrated line load $Q_L = Q_c/(2A + L)$ kN/m run of wall.

For a line load (or equivalent line load) the total lateral force on the wall due to Q_L is:

$$P_n = Q_L \sqrt{K_a} \text{ kN/m run of wall}$$

 © Standards Australia

The pressure diagram for this force is triangular over the depth D where:

$$p_n = \frac{2P_n}{D_D}$$

The surcharge load due to the adjacent structure should be added to the earth pressure diagram calculated from Appendix C.

The resulting earth pressure diagram is simplistic and the values approximate. As the width B increases, the pressures become more conservative and a check should be made to see if an equivalent uniform surcharge would be more economical.

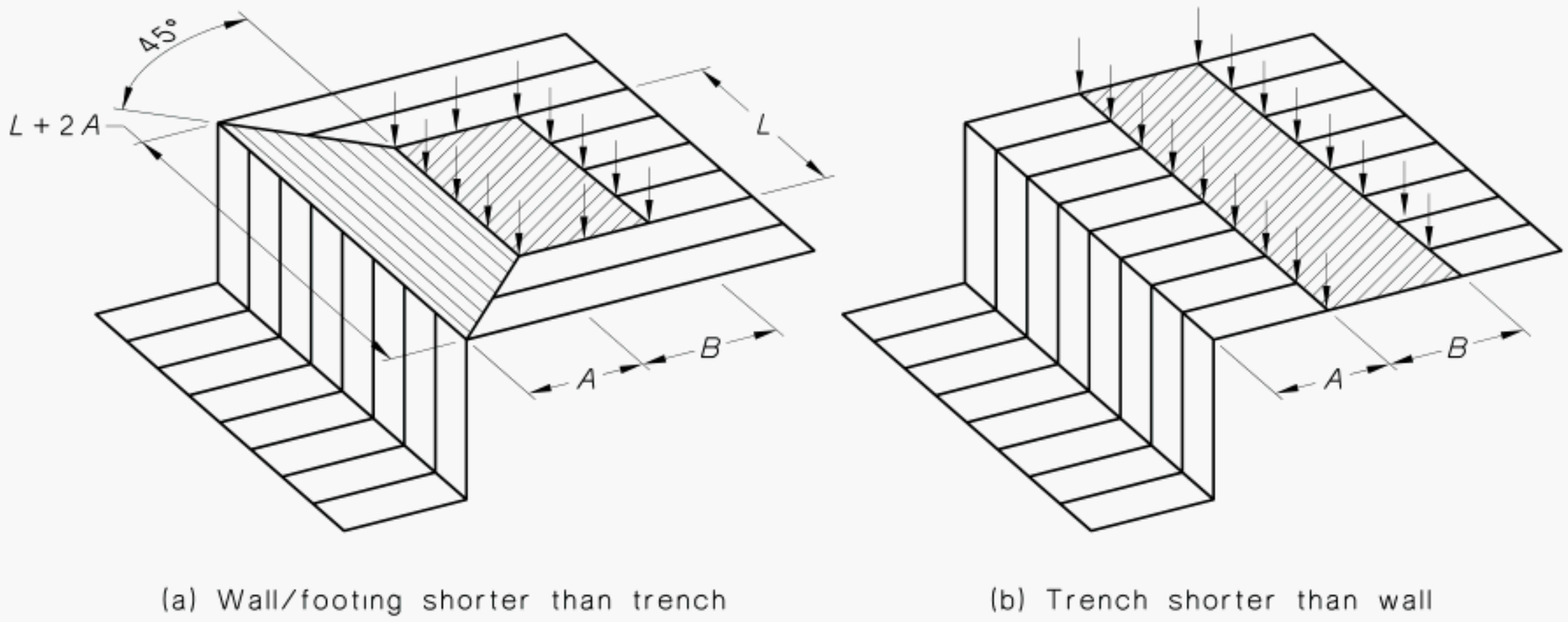

(a) Wall/footing shorter than trench

(b) Trench shorter than wall

LEGEND:
L = length of wall (m)
B = width of wall (m)
A = wall distance from trench (m)

FIGURE E1 LOADS FROM WALL FOOTINGS

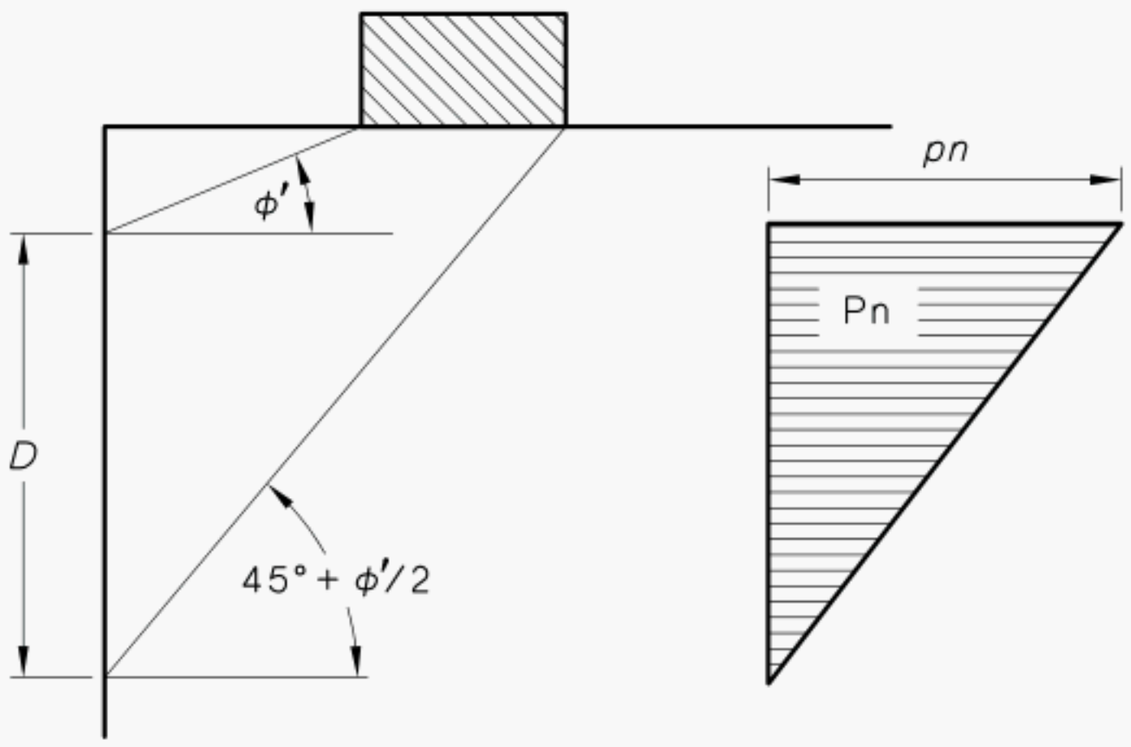

FIGURE E2 PRESSURE ENVELOPE FROM WALL FOOTINGS

Standards Australia

Standards Australia is an independent company, limited by guarantee, which prepares and publishes most of the voluntary technical and commercial standards used in Australia. These standards are developed through an open process of consultation and consensus, in which all interested parties are invited to participate. Through a Memorandum of Understanding with the Commonwealth government, Standards Australia is recognized as Australia's peak national standards body.

Australian Standards

Australian Standards are prepared by committees of experts from industry, governments, consumers and other relevant sectors. The requirements or recommendations contained in published Standards are a consensus of the views of representative interests and also take account of comments received from other sources. They reflect the latest scientific and industry experience. Australian Standards are kept under continuous review after publication and are updated regularly to take account of changing technology.

International Involvement

Standards Australia is responsible for ensuring that the Australian viewpoint is considered in the formulation of international Standards and that the latest international experience is incorporated in national Standards. This role is vital in assisting local industry to compete in international markets. Standards Australia represents Australia at both ISO (The International Organization for Standardization) and the International Electrotechnical Commission (IEC).

Electronic Standards

All Australian Standards are available in electronic editions, either downloaded individually from our Web site, or via on-line and CD ROM subscription services. For more information phone 1300 65 46 46 or visit us at

www.standards.com.au

Standards Australia

GPO Box 5420 Sydney NSW 2001
Administration Phone (02) 8206 6000 Fax (02) 8206 6001 Email mail@standards.com.au
Customer Service Phone 1300 65 46 46 Fax 1300 65 49 49 Email sales@standards.com.au
Internet www.standards.com.au

ISBN 0 7337 3556 8

Printed in Australia

This page has been left intentionally blank.